SPEC MIX®

SILO DELIVERY
SYSTEMS

D2W MIXING SYSTEM
GAS POWERED HYDRAULIC DRIVE

OPERATIONS AND SAFETY MANUAL

SPEC MIX D2W GAS POWERED HYDRAULIC DRIVE Installation:

Vibrator installation:

Vibrator mounts on a divided piece of fork channel stitch welded to the silo as shown on the SPEC MIX literature. Do not full weld the channel. Weld on about 1 foot above the rain skirt. Drill a proper bolt hole pattern into the channel to receive the vibrator. A vibrator mount with predrilled holes to receive the SPEC MIX D2W GAS POWERED HYDRAULIC DRIVE vibrator is available from SPEC MIX Inc.

Silo Leg Preparation:

Remove standard legs from SPEC MIX silo and drill additional leg pin holes into the silo legs as laid out in the SPEC MIX D2W GAS POWERED HYDRAULIC DRIVE Silo Leg diagram to allow for lower pin positions. Leg pin hole diameter should be consistent with existing holes. Pre-drilled legs are available from SPEC MIX Inc.

D2W GAS POWERED HYDRAULIC DRIVE Auger Installation:

1. Chose a 1998 or newer silo that has a 18" swivel gate on it and a round (not square) opening at the base of the silo.
2. Remove the slide gate.
3. Keep the 4 swivel plates and 8 bolts that were previously installed on the flange of the silo.
4. Make sure that the transition cone is bolted to the D2W GAS POWERED HYDRAULIC DRIVE above its gate and raise the auger up to the silo flange. Line it up to the silo opening and the swivel plates. Bolt the swivel plates to the transition cone using the 8 bolts that were previously installed. Make sure to use lock nuts.
5. Grease the slide plates with a grease gun at the 4 zerts.
6. D2W GAS POWERED HYDRAULIC DRIVE should rotate cleanly side to side from the bottom of silo cone.
7. Chose a 1998 or newer silo that has a 18" swivel gate on it and a round (not square) opening at the base of the silo.

Auger/Mixing Shaft Set-up:

1. **For 8 bulk bags per hour, install full pitch screw.**
2. **For 3.5 bulk bags per hour, install ½ pitch screw.**

D2W GAS POWERED HYDRAULIC DRIVE Panel Installation:

1. Hang both the electric and water pump panel on the cross bar that runs from leg to leg of the silo on the side that is under the loading platform. Tensioning bolts must be retracted and locking pins must removed prior to hanging.
2. Position the water pump panel closest to the discharge chute of the D2W GAS POWERED HYDRAULIC DRIVE.
3. Tighten the panels to the silo cross bar using the tensioning bolts.
4. The panels can be adjusted up and down on the mounting hooks by adjusting the tensioning bolts at the back of the panel to a comfortable height for the operator.
5. Slide the locking pins under into the holes in the mounting bracket under the crossbar of the silo. I padlock can be placed in these pins to lock the panel to the silo. A second set of pad locks can be placed in the hole at the bottom of the mounting hook so the panels cannot be slid off the mounting hooks.
6. Connect the water line from the port on the mixing auger to the exit port at the top of the water panel. Run the extra slack in the water line up over the rain skirt of the silo and coil the slack. Do not allow the water line to kink at its entry into the auger.
7. Connect all plugs from the auger to the electric panel, vibrator to electric panel and water pump to electric panel. The plugs all have different ends and can only plug in one way. Additionally, there are tags under the electric panel telling which plug goes where. Finally, the plugs are twist lock, so make sure that they are plugged in tight and twisted.
8. Have the on-site electrician verify power into the D2W GAS POWERED HYDRAULIC DRIVE. We need 250 V, 50 Amp power at the electric panel, not at the electric panel on site or after it moves down the power cord. The cord needs to be 8 gauge or 6 gauge if making very long runs (100ft+). A plug end is supplied from the factory for the contractors extension cord that will need to be wired by the onsite electrician to the 8 or 6 gauge cord.
9. Panel can be accessed with a standard flat screwdriver or a like tool.

Water Supply:

The D2W GAS POWERED HYDRAULIC DRIVE can either be connected to pressurized water or can pull standing water from a tank that is 150 gallons or larger.

<u>Pressurized Water Source:</u>

1. If pulling water from a Hydrant or water tap on a building, connect the water line directly to the water in port on the lower right of the water panel. There is an adaptor that comes with the pump panel that has a King or Chicago fitting on one side and a ¾” hose thread on the other for receiving the water hose. Connect King fitting to king fitting.

2. It is helpful to use large diameter water line when possible. We suggest 1” line with ¾” thread ends. This will promote good water volume going into the machine. Smaller diameter hoses lose volume and pressure especially if the hose is run a long way from the source. The hose also must be protected and dedicated. Anytime that a forklift or vehicle runs over the hose, water volume will be reduced going into the mixing chamber changing the consistency of the material. Also, if the water line is not dedicated, anytime that another hose is connected and used in series the volume of water entering the mixing chamber will be affected which will change the consistency of the material exiting the D2W GAS POWERED HYDRAULIC DRIVE.
3. The water pressure should be checked at the pump panel. There is a pressure gauge below the water adjustment valve. Pressure should be between 30 psi and 90 psi. High pressures are possible, especially when pulling water directly from a hydrant. If the pressure is in excess of 100 psi, a pressure regulator needs to be added at the hydrant by the on-site plumber to reduce the pressure. Water volume is needed, not high pressure. If the pressure is too high it can cause excessive splashing inside the mixing chamber which will lead to the auger potentially getting mortar stuck around it at the transition which will affect the mixing of the material.
4. There is a valve above the water in port with hose thread on it. It can have a hose attached to it only when pulling pressurized water and can be used for cleaning of mortar tubs, tools, etc. It is important that the contractor only use this hose when the D2W GAS POWERED HYDRAULIC DRIVE is not running. If used when the D2W GAS POWERED HYDRAULIC DRIVE is running, the water going to the mixing chamber will be reduced causing the mix to be stiffer than expected when exiting the D2W GAS POWERED HYDRAULIC DRIVE.

<u>Standing Water Source:</u>

The SPEC MIX D2W GAS POWERED HYDRAULIC DRIVE can run using a standing water source from a tank with its water pump panel.

1. To pump water, attach the siphoning hose to the water inlet port of on the bottom right side water pump panel.
2. Check the strainer at the end of the siphoning hose to make sure that it is free and clear of any dirt or debris. Inside the strainer is a valve. Check this valve to make sure that it is functioning properly.
3. The siphon hoes must be primed before turning the pump on. To prime, open the valve above the water inlet port and fill the siphon hose with water. Once the hose is completely full of water, shut the valve.

4. When siphoning water, make sure to use a large standing water source. A 55 gallon drum is too small and will run out of water quickly causing a loss of prime to the hose. A 150 gallon or greater container is recommended.
5. At the end of each day, empty all water from the water pump panel by first shutting off any pressurized water source and then opening the water exit valves at the bottom of the panel.

Note: Always protect from freezing. Water freezes at 32 degrees. In cold weather, the silo system should be enclosed and heated. Water should be heated. If the enclosure is not heated overnight or through a weekend, the water pump panel should be removed from the silo and placed in an area that will have heat. Make sure that the hose from the water pump panel to the mixing chamber is also free of water at the end of the day in freezing weather.

SPEC MIX D2W Operation:

Electric Panel Operation:

1. Turn on the main power switch located at the top, center of the panel. When turned on, the power on indicator should illuminate.
2. On the lower right of the panel is the vibrator control switch. Turn the vibrator switch on when normally using the SPEC MIX D2W GAS POWERED HYDRAULIC DRIVE to keep product feed constant.
3. Locate the operation switch and select either local or remote.
    a. Remote – when remote operation is selected, use the remote control to operate. Press the 1 button (left button) to turn on and the 2 button (right button) to turn off. Range is approximately 300 ft.
    b. Local – when local operation is selected, the remote will not work. Press the green run button to turn on the SPEC MIX D2W GAS POWERED HYDRAULIC DRIVE and the red stop button to stop the SPEC MIX D2W GAS POWERED HYDRAULIC DRIVE.
4. Locate the function selection switch which is labeled with 3 options; Clean, Mix and Continuous. The clean option and its function is discussed below in the Cleaning Instructions section. The remaining options allow the user to choose either a continuous mixing cycle (continuous) or a timed batch mixing cycle (mix).
    a. Continuous – when continuous mix is selected, the SPEC MIX D2W GAS POWERED HYDRAULIC DRIVE will run until stopped by the user either at the panel or by remote.
    b. Mix – when mix is selected, the SPEC MIX D2W GAS POWERED HYDRAULIC DRIVE will run for a set period of time and shut off automatically. The length of run time can be adjusted with the dial on the lower left of the control panel labeled “Fill Size”. When you turn the Fill Size dial as far as it can go to the left, the SPEC MIX D2W GAS POWERED HYDRAULIC DRIVE will run for 1 minute. When the Fill Size dial is turned as far as it can go to the right, the SPEC MIX D2W GAS POWERED HYDRAULIC DRIVE will run for 10 minutes. Setting the Fill Size dial at 12 o’clock will run the SPEC MIX D2W GAS POWERED HYDRAULIC DRIVE for approximately 5 minutes. This function lets the user to pick the length of time that the SPEC MIX D2W GAS POWERED HYDRAULIC DRIVE runs which allows the user to mix batches to the size of the container or amount of material required to do the job.
    c. Do not open the electrical panel door unless the fault indicator is illuminated (Red Light). If the SPEC MIX D2W GAS POWERED HYDRAULIC DRIVE is not operating properly but the fault light is not illuminated, it is likely that the problem is not with the electric panel.

Cleaning Instructions:

Daily Cleaning Procedure:

1. Shut off the product flow by closing the gate above the SPEC MIX D2W GAS POWERED HYDRAULIC DRIVE auger. To do this, pull the handle to the closed position. To ensure that the gate is closed, look at the rod that goes through the gate and exits opposite the handle. It has a line scored on it that matches the position or direction of the gate. Make sure that this is horizontal when cleaning the unit.
2. Once the silo gate is closed, return to the control panel. Locate the mixing cycle indicator (Clean - Mix - Cont) switch in the center of the panel. Turn the switch to the clean cycle position.
3. Place a tub or container at the bottom of the D2W discharge and Start the SPEC MIX D2W GAS POWERED HYDRAULIC DRIVE either at the panel or from the remote by pressing 1.
4. The SPEC MIX D2W GAS POWERED HYDRAULIC DRIVE will run for approximately 2 minutes allowing water to flush out the mixing chamber and into the container placed at the bottom. The paddles and mixing chamber are made out of a specialized plastic that resists cementitious material sticking to it.
   Note: If the SPEC MIX D2W GAS POWERED HYDRAULIC DRIVE is sitting between batches for an extended period of time, please run a clean out cycle to keep the mixing chamber clean.

Weekly Cleaning Procedure:

1. Unplug the main power into the SPEC MIX D2W GAS POWERED HYDRAULIC DRIVE.

2. Using a 17mm wrench or socket, remove the 3 nuts around the edge of the discharge chute.
3. Remove the mixing auger by pulling it out of the mixing chamber.
4. Inspect the mixing auger and scrape any build up material from the shaft, paddles or screw of the mixing auger.
5. Locate the clean out door below the dry product chamber of the mixing auger.
6. Using a large adjustable wrench or large channel locks, loosen the bolt that holds the clean out door in place.
7. Remove the positioning bar and carefully remove the clean out door.
8. Using a brush and margin trowel, clean all dry product out of the dry product chamber. Make sure to clean out the auger receiving collar at the rear of the mixing chamber.
9. Replace the clean out door, slide the locking bar in place and tighten the bolt under the dry product chamber.
10. Slide the mixing auger back into the mixing chamber. Make sure to push the mixing auger far enough into the mixing chamber to reach the auger receiving collar. Once the mixing auger has reached the back of the mixing chamber, slowly rotate the auger until it slides into the receiving collar. When properly inserted into the receiving collar, the last mixing tool (the wiper) will be inside the end of the mixing chamber about ¼”.
11. Replace the SPEC MIX D2W GAS POWERED HYDRAULIC DRIVE chute, lining up the three bolts with the bolt holes on the chute. The mixing auger slides through the hole in the center of the chute.

Note: Cleaning out the dry product chamber and inspecting the auger weekly is a critical step in the maintenance process for this equipment. Failure to clean out the dry product chamber can cause premature wear and tear in the product conveying auger section if foreign objects get into the chamber. The mixing auger itself can occasionally get build up of product, especially where the product transitions from dry to wet material.

Trouble Shooting:

Problem: The SPEC MIX D2W GAS POWERED HYDRAULIC DRIVE will not turn on.

1. Check the main power coming into the electric panel. The power should be 250 volt, 50 amp service. It is important that this is checked at the machine, not at the panel. Make sure that there are no tears in the protective coating on the power cord and that it is not laying in standing water.

2. Check to make sure that the plugs are all connected properly. The plug ends used on the SPEC MIX D2W GAS POWERED HYDRAULIC DRIVE are waterproof, twist lock plugs. They need to be connected tight and twist locked in place. The connection is very tight.
3. Check the wiring to make sure that the wires at the panel and in the plug head are connected properly.

Problem: The SPEC MIX D2W GAS POWERED HYDRAULIC DRIVE is not producing consistent product, the mix is too wet and then too dry.

1. Make sure there is product in the silo. If not full, load the silo to capacity.
2. If using pressurized water (not siphoning water) check the water source to make sure that it produces consistent volume into the pump panel. This can easily be checked by running the machine and watching the flow meter. If the float is moving during operation, the water coming into the machine is not consistent. This can be due to others pulling water from the same source on the jobsite or even the same waterline in a community. It can also be due to the water line being run over by traffic on site. To remedy, go to a larger hose (1” line is recommended) and protect the water line from being run over on site. If this does not remedy the issue, switch to a large standing water source and siphon water into the water pump panel.
3. Check the hose for any kinks. This is especially important for the line going from the water pump panel to the mixing chamber. To keep this line from kinking, run the water hose up over the fork pockets of the silo and coil to pick up any slack.
4. Make sure that the product shut off gate is completely open. If the gate is not straight up and down, bridging can occur causing surges in product. Check this by inspecting the grove in the rod end opposite the product shut off handle at the transition between the silo and mixing auger. The groove or line should be vertical.
5. Check to make sure that the vibrator is on and working properly. If the vibrator is not on, check to make sure that the vibrator switch is set to on at the electric panel. Once it is on, check to make that the vibrator runs for approximately 10 seconds on and then 10 seconds off. To do this, run the SPEC MIX D2W GAS POWERED HYDRAULIC DRIVE and place your hand on the vibrator housing. If the time frame is not 10 seconds on and 10 seconds off, contact your local SPEC MIX sales representative. If the vibrator is not running at all, check the plug in connections to make sure that it is properly twist locked into position and verify that the vibrator plug is plugged into the right cord at the electric panel by looking at the labels under the panel near the cord exits. If the vibrator is plugged in correctly and still does not run, check the fault light to make sure it is not lit up red. If lit up red, open the electric panel door

and flip the tripped breaker. If the fault light is not red, contact your local SPEC MIX sales representative.

6. If the vibrator is functioning properly, it is possible to increase the vibration output by adjusting the weights inside the vibrator. To do this, remove the large orange caps on either side of the vibrator and adjust the weights out. A metric set of Allen wrenches are required and this should be done by your local SPEC MIX representative. Make sure that the machine is unplugged before making this adjustment.

Problem: The SPEC MIX D2W GAS POWERED HYDRAULIC DRIVE is producing material slower and has become wetter, requiring a reduction in water.

1. Check the water supply to make sure that it is still on and that no one has also pulled water off the same line. You need dedicated water for this equipment.
2. Check the mixing auger for build up. There may be build up on the auger flighting at the point where the product transitions from dry product to wet product. This reduces the volume of product being introduced into the mixing chamber which will in turn require less water to produce material at the same flow.

Problem: The SPEC MIX D2W GAS POWERED HYDRAULIC DRIVE water pump panel is leaking water inside the panel box at the impeller housing.

1. The panel has not been drained during weather that is too cold and has frozen. Thaw the panel slowly in a heated area. Empty the pump panel of all water. Remove the pump itself and open the impeller housing. Remove old seal gasket and replace with new seal gasket. Check impeller for any damage.
2. Check the solenoid for any internal damage. If damaged, replace. Make sure to get the same solenoid and coil. The coil must match the original unit for amps and voltage.
3. Check the flow meter for any damage. If cracked, replace.

Problem: Prime is lost when siphoning water.

1. Make sure that the standing water source is large. A 50 gallon drum is not big enough as the water will only make a few batches. Low water levels can cause a loss of prime. A 150 gallon or greater water source should be used.
2. Check the valve at the prime port to make sure that it is completely shut.
3. Check the valve in the strainer at the end of the siphoning hose and make sure that it is properly functioning.

Problem: When mixing, smoke is visible at the end of the mixing auger and there is a burning odor.

1. The mixing auger has been forced forward towards the discharge chute due to dry product build up in the auger receiving collar at the rear of the dry powder chamber in the mixing auger.
    a. Run a clean out cycle.
    b. Unplug the main power into the SPEC MIX D2W GAS POWERED HYDRAULIC DRIVE electric panel.
    c. Remove the discharge chute and remove the mixing auger.
    d. Remove the clean out door under the dry product chamber section of the mixing auger.
    e. Using a margin trowel or scraper and brush, clean the entire dry product chamber. Make sure to scrape and clean out the dry product build up in the auger receiving collar located at the end of the mixing chamber.

Note: The only way that problem occurs is if the mixing auger is removed and inspected then replaced without cleaning the dry product chamber as the auger will push dry product back into the receiving collar when reinserting it if the dry product chamber is full. The dry product chamber should always be empty when reinserting the mixing auger.

Problem: When D2W is started, material is dry coming out for the first 1-5 seconds.

1. Hose from water pump panel to mixing chamber may have lost water.
    a. Check to make sure that hose from water pump panel to mixing chamber is installed correctly.
    b. Hose from the water pump panel to mixing chamber may be too long. Cut and shorten the hose.

Problem: When D2W Motor stops running or runs slow.

1. D2W may be hooked up to inappropriate power supply which may cause the motor or parts of the motor to burn out.
    a. Check to make sure that there is 250V, 50 Amp power is at the D2W. Consult with an electrician and replace motor if necessary.

The following Standard Operating Procedure (SOP) is for maintaining the SPEC MIX D2W GAS POWERED HYDRAULIC DRIVE when it is returned to the plant from a project to ensure that it is in good operating condition and to aid sales in assessing damages to customers when appropriate.

Water Requirement:

• 250+ gallon tote (for siphoning water)

Tools Required:

• 2 - 17mm wrenches or ratchets
• Large adjustable wrench
• Hammer
• Scraper / chisel
• Stiff bristle brush
• Margin trowel
• Grease gun
• Volt / amp meter

D2W GAS POWERED HYDRAULIC DRIVE Auger Shaft Assembly Maintenance:

1. Close the material flow gate above the D2W GAS POWERED HYDRAULIC DRIVE auger at the base of the silo cone.

2. Remove the inspection hatch at the underside of the dry powder chamber of the D2W GAS POWERED HYDRAULIC DRIVE.

3. Remove the discharge chute at the end of the mixing auger.
4. Remove the auger shaft from the auger chamber.

5. Clean the mixing tools and auger flighting. Remove any build-up of hardened material on the mixing shaft using a hammer, chisel and stiff brush.

6. Replace any of the worn mixing attachments on the auger shaft.

Important: Always remember to replace the auger parts in the same order as they were removed and in the same position and orientation. The dry material auger sections should always be installed with the recessed end inserted first onto the mixing shaft first.

When the plastic dry material auger from the factory wears out, order and install a metal replacement auger from SPEC MIX Inc..
Metal replacement augers are available in ½, ¾ and full pitches.

• The ½ pitch auger (3.5 bulk bags per hour) is always used for mortar mixing, **Part # 12091FPSA**.

• The ¾ pitch auger (5.5 bulk bags per hour) can be used for grout and has been effective for mixing mortar but consistency would need to be verified locally, **Part # 12093FPSA**.

• The full pitch auger (7-8 bulk bags per hour) is only used for grout production and should not be installed on a silo that is intended for mortar production, **Part # 1209FPSA**

7. Place a container under the D2W GAS POWERED HYDRAULIC DRIVE below the inspection hatch and open the gate to allow the removal of any material that is still in the silo. Make sure to use the silo hammer to vibrate any loose material hung up in the silo. Close the gate when the silo is clean and lock it into place with the tension knob.

8. Remove and inspect the lump breaker. It is located inside the dry powder chamber at the receiver for the mixing shaft. Inspect the lump breaker for wear and if it is bent, attempt to bend it straight again. If it cannot be repaired or is worn to a point where the metal is sticking through the plastic, replace it.

9. Replace the repaired and cleaned mixing auger. Make sure that it is seated properly into the mixing auger receiver in the dry powder chamber of the D2W GAS POWERED HYDRAULIC DRIVE. When properly installed, the last mixing attachment (the wiper) should be recessed about a half inch into the outer mixing chamber.

10. Replace the inspection hatch once you are sure that the mixing auger is properly installed.

11. Replace the discharge chute. Inspect the ceramic bushing in the center of the discharge chute and replace it if cracked or worn.

12. Inspect the outer mixing chamber. If any cracks or wear holes are identified, replace. Do not attempt to patch the outer mixing chamber.

13. Check the water inlet at the mixing chamber and remove any blockages.

14. Grease the four swivel plates at the connection of the silo and the gate for the SPEC MIX D2W GAS POWERED HYDRAULIC DRIVE. Make sure that the D2W GAS POWERED HYDRAULIC DRIVE swivels freely.

15. Check to make sure that the handle on the gate is properly aligned so that the gate is shut (horizontal) when in the closed position and open (vertical) when in the open position. This can be checked by looking at the axel on the gate opposite the handle. There is a grove cut into the flush end of the axel that runs in the same direction as the gate itself for reference.

16. Check the plug end and power cord for any exposed wires or other issues that may cause the equipment to not function properly.

Electric Panel Maintenance:

1. Check the mounting brackets to ensure that they are secure and all the tension bolts are properly functioning.

2. Check all the plug ends to make sure that they are free of obstructions and properly twist-locked into the appropriate matching plugs.

3. Remove any mortar build-up on the panel and insure that all the buttons and switches function properly.

4. Inspect the male end of the main power plug that should have been returned by the contractor. If it did not get returned from the jobsite, contact sales so they can retrieve or charge the contractor for a replacement.

Water Stick Maintenance:

1. Check the mounting brackets to ensure that they are secure and all the tension bolts are properly functioning.

2. Remove any mortar build-up on the stick.

3. Inspect the siphon hose for any holes or other wear issues that need correction. Remove the screen on the foot valve and inspect the spring mechanism of the foot valve to make sure it is functioning properly. If the siphon hose is missing upon return, contact sales immediately so they can retrieve or charge the customer for a replacement.

4. Inspect the pressurized hose attachment for any signs of wear issues that need correction. If the pressurized hose attachment is missing upon return, contact sales immediately so they can retrieve or charge the customer for a replacement.

5. To drain disconnect the hose feeding the stick and the hose going to the mixing chamber

Maintenance Requiring Power to Check:

The following D2W GAS POWERED HYDRAULIC DRIVE maintenance items require the D2W GAS POWERED HYDRAULIC DRIVE to be powered. To properly power the D2W GAS POWERED HYDRAULIC DRIVE you must supply 250 to 230 volt, 50 amp single phase service to the equipment. If power is not available, a generator with a minimum capability of producing of 20 kilowatts can be substituted. Use an 8 gauge, 3-wire power cord if the distance from the power source to the D2W GAS POWERED HYDRAULIC DRIVE is 50 feet or less. If it is necessary to run a power cord over 50 feet from the power source, use a 6 gauge, 3-wire power cord.

2. Connect the siphon hose to the water stick and insert it into a full water container that is at least 100 gallons.

> **Important: Do not use a pressurized water hose to test the D2W GAS POWERED HYDRAULIC DRIVE as it will not allow you to properly diagnose water pump issues.**

3. Turn on the main power switch and verify that the main power indicator illuminates. If the main power indicator light does not illuminate, check the power source coming into the machine.

> **Important: The most common fault occurs when the contractor does not run a clean out on the equipment leaving product in the mixing chamber, then attempts to run this equipment with hardened material around the mixing auger. Make sure to check the mixing auger if the fault light is illuminated.**

4. Verify that the mixing auger is turning in the correct direction, clockwise when facing the auger from the front of the discharge chute. If not, check the plug end to verify that it is properly twistlocked into position. Then check the circuit breakers inside the panel for a tripped breaker. Refer to the V05 GAS POWERED HYDRAULIC DRIVE manual for more information.

5. Turn the vibrator switch to on and verify that the vibrator switches on for approximately 10 seconds and then off for approximately 10 seconds. If using the vibrator.

> **Important: These units will be shipped without the vibrator engaged and a phone call will need to be made to activate it if it is needed.**

6. Run the D2W GAS POWERED HYDRAULIC DRIVE in each of the mixing cycles to verify proper function (Continuous, Mix and Clean).

7. Run the D2W GAS POWERED HYDRAULIC DRIVE and check the mix time selector to verify that it is properly functioning. When the mix cycle indicator is set to mix, the mix timing knob should run the D2W GAS POWERED HYDRAULIC DRIVE for approximately 1 minute when turned as far as it will go to the left and for approximately 10 minutes when turned all the way to the right. At the end of these cycles, the D2W GAS POWERED HYDRAULIC DRIVE will stop automatically.

8. Run the D2W GAS POWERED HYDRAULIC DRIVE in continuous mode to verify its function. The D2W GAS POWERED HYDRAULIC DRIVE should run until it is shut off when the mix cycle indicator is set on this mode.

9. Run the D2W GAS POWERED HYDRAULIC DRIVE in the clean mode to verify its function. When set to clean, the D2W GAS POWERED HYDRAULIC DRIVE should run for approximately 2 minutes and then shut off automatically.

WATER STICK

ITEM	QUANTITY	DESCRIPTION	PART NUMBER
1	4	1" ALUMINUM CAM LOCK	PTEHD2W099
2	1	¾ SHUT OF/ADJUSTING VALVE	PTEHD2W100
3	1	1" SHUT OFF/ADJUSTING VALVE	PTEHD2W101
4	5	1" CLOSE NIPPLES	PTEHD2W102
5	3	¾" CLOSE NIPPLES	PTEHD2W105
6	1	¾ TO 1" ADAPTER	PTEHD2W106
7	1	12 VOLT SOLENOID VALVE 2 WAY	PTEHD2W104
8	1	1" TEE	PTEHD2W107
9	1	PRESSURE GAGE	PTEHD2W108
10	1	Y WITH STRAINER/FILTER	PTEHD2W103

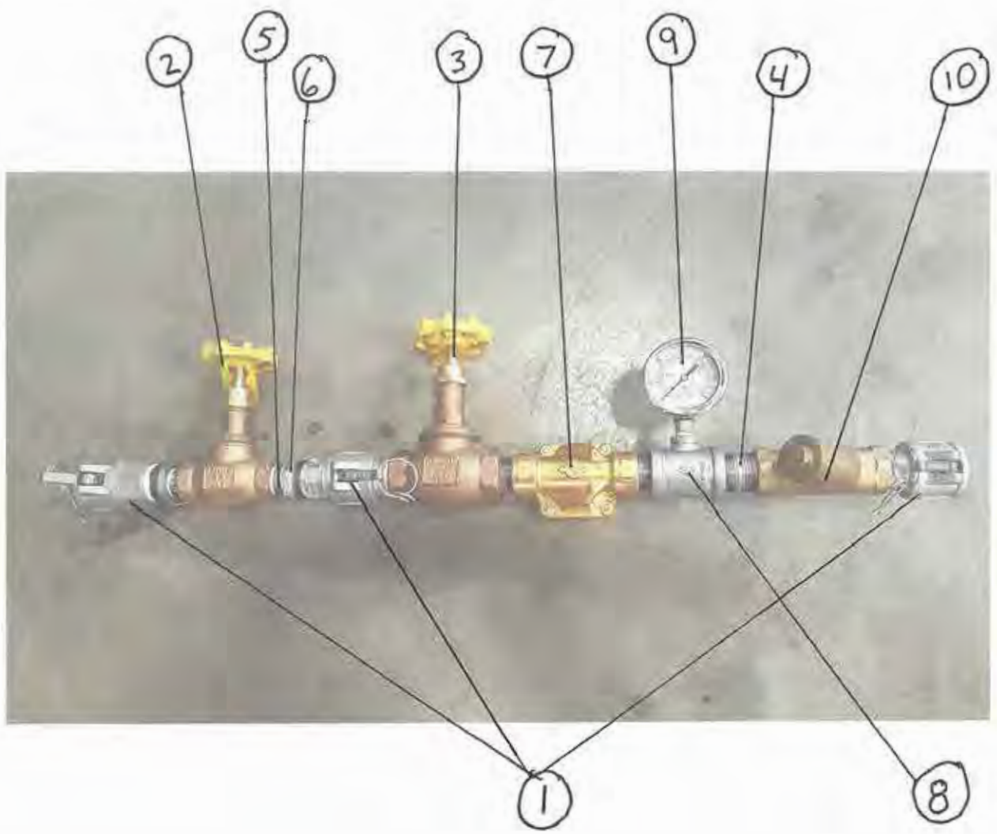

WAM®

WAMGROUP

1

TECHNICAL CATALOGUE

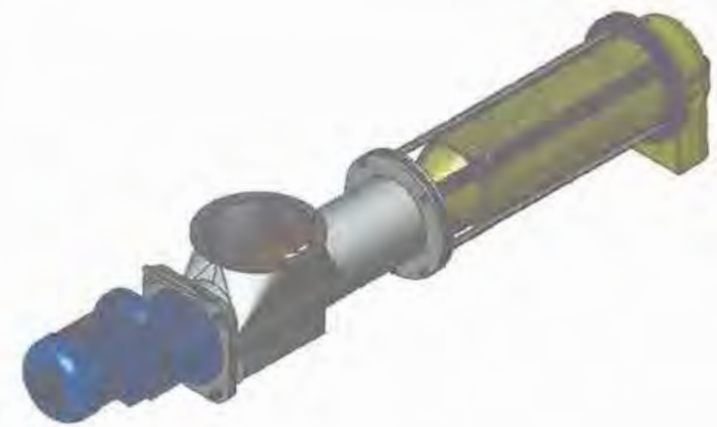

WETMIX® V05

- **MORTAR MIXER**
  TECHNICAL CATALOGUE
- ***MÖRTELMISCHER***
  TECHNISCHER KATALOG
- **MELANGEUR DE MORTIER**
  CATALOGUE TECHNIQUE
- ***MESCOLATORE PER MALTA***
  CATALOGO TECNICO

CATALOGUE No.	WA.02532 T.		CREATION DATE
ISSUE A	CIRCULATION 100	DATE OF LATEST UPDATE	10 - 2005

WAM®

All the products described in this catalogue are manufactured according to **WAM® S.p.A. Quality System procedures.**
The Company's Quality System, certified in July 1994 according to International Standards **UNI EN ISO 9002-94** and extended to **UNI EN ISO 9001-2000** in October, 2002, ensures that the entire production process, starting from the processing of the order to the technical service after delivery, is carried out in a controlled manner that guarantees the quality standard of the product.

*Alle in diesem Katalog beschriebenen Erzeugnisse werden in Konformität mit dem **Qualitätssystem der WAM® S.p.A. hergestellt.***
*Das im Juli 1994 zertifizierte Qualitätssystem entspricht der Norm **UNI EN ISO 9002-94** (im Oktober 2002 auf **UNI EN ISO 9001-2000** erweitert) und gewährleistet dem Kunden eine strenge Qualitätskontrolle in jeder Phase des Produktionprozesses bis hin zum Kundendienst nach Auslieferung der Ware.*

Tous les produits décrits dans ce catalogue ont été réalisé selon les modalités opérationnelles définies **Système de Qualité de WAM® S.p.A.**
Le systéme de Qualité de l'entreprise, certifié au mois de juillet 1994 en conformité aux Normes Internationales **UNI EN ISO 9002-94** et successivement étendu à **UNI EN ISO 9001-2000** au mois de octobre 2002, est en mesure d'assurer que le procédé entier de production, à partir de la formulation de la commande jusqu'au service technique après la livraison, soit affectué de manière contrôlée et appropriée afin de garantir le standard de qualité du produit.

*Tutti i prodotti descritti in questo catalogo sono stati realizzati secondo modalità operative definite **Sistema Qualità di WAM® S.p.A.***
*Il Sistema Qualità aziendale, certificato dal luglio 1994 in conformità alle Normative Internazionali **UNI EN ISO 9002-94** e successivamente esteso alle Normative Internazionali **UNI EN ISO 9001-2000** nell'ottobre 2002, è in grado di assicurare che l'intero processo produttivo, dalla formulazione dell'ordine fino all'assistenza tecnica successiva alla consegna, venga effettuato in modo controllato ed adeguato a garantire lo standard qualitativo del prodotto.*

TÜV SÜD ISO 9001

UNI EN ISO 9001-2000
Certified Company

Possible deviations due to modifications and/or manufacturing tolerances are reserved.

Abweichungen infolge Änderungen und/oder aufgrund von Fertigungstoleranzen sind vorbehalten.

Nous nous réservons des écartements éventuels dûs des modifications et/ou des tolérances d'usinage.

Ci riserviamo eventuali scostamenti dovuti a modifiche e/o tolleranze di lavorazione.

WAM®

WETMIX® V05

- INDEX
- INHALTSVERZEICHNIS
- INDEX
- INDICE

10.05

WA.02532. INDEX

The WETMIX® V05 is a continuous single-shaft horizontal mixer with the mixer chamber and shaft completely lined with wear-resistant synthetic material.
Thanks to its modularity, the WETMIX® V05 is found to be particularly suitable for handling by a single person.

WETMIX® V05 ist ein kontinuierlicher waagerechter Einwellenmischer mit Mischkammer und Mischwelle, die komplett mit einem verschleißbeständigen, synthetischen Werkstoff verkleidetet sind.
Dank der Modulbauweise eignet sich WETMIX® V05 besonders für das Handling durch nur eine Person.

Le WETMIX® V05 est un mélangeur continu horizontal à un arbre avec chambre et arbre de mélange entièrement revêtus de matière synthétique anti-usure.
Grâce à sa modularité le WETMIX® V05 est tout particulièrement adapté pour être transporté par une seule personne.

Il WETMIX® V05 è un mescolatore continuo orizzontale ad un albero con camera e albero di mescolazione interamente rivestiti con materiale sintetico antiusura.
Grazie alla sua modularità il WETMIX® V05 risulta particolarmente adatto ad essere trasportato da una sola persona.

The machine is designed for use **in the building sector exclusively for the production of mortars** obtained from premixed products and finishing products by direct feed from silo/non-pressurized hopper (product falls due to gravity).
The maximum permitted product grain size is 3 mm.

Das Gerät ist zum Einsatz im **Baugewerbe bestimmt, und zwar ausschließlich zur Vor-Ort-Produktion von Mörtel,** hergestellt in Anlagen zur Aufbereitung von vorgemisch-ten Trockenbaustoffen, die fertig abgefüllt in transportablen Silos oder Druckbehältern auf die Baustelle geliefert und dort durch den WETMIX®-Mörtel-mischer zu Nassmörtel verar-beitet werden.
Die höchst-zulässige Korngröße des Pro-dukts beträgt 3 mm

La machine a été conçue pour être utilisée dans **le secteur du bâtiment, exclusivament pour la production de mortiers** obtenus à partir d'installation de produits prémélangés et des produits de finition alimentés directement par silo/trémie non pressurisé (chute gravitationnelle du produit). La granulométrie max. admissible du produit est de 3 mm.

La macchina è stata progettata per **l'impiego nel settore edile esclusivamente per la produzione di malte** ottenute dall'impasto di prodotti premiscelati e prodotti di finitura tramite l'alimentazione diretta da silo/tramoggia non pressurizzato (caduta gravitazionale del prodotto).
La granulometria max consentita del prodotto è di 3 mm.

These machines are NOT SUITABLE for handling food products.
It is also forbidden to start up the appliance before the silo/plant it is going to be installed in have been declared as conforming to the European Directive 98/37/CE, and provisions for national implementation standards.
It is the plant designer's / plant fitter's responsability to design and install all necessary protection in order to avoid that breaking and / or yielding of the equipment or of parts of it might damage people and / or parts of the plant (e.g. adequate protection against falling down of the motor etc.).

Diese Geräte sind aus Werkstoffen gefertigt, die sie für das Handling von Nahrungsmitteln UNGEEIGNET machen.
Es ist außerdem nicht zulässig, das Gerät vor dem Silo/der Anlage in Betrieb zu nehmen, an welches es angebaut wird, mit den Vorschriften der Richtlinie 98/37/CE sowie den betreffenden nationalen Richtlinien erklärt wurde.
Es liegt in der Verantwortung des Anlagenplaners bzw. -aufstellers, alle notwendigen Schutzvorrichtungen vorzusehen, welche es verhindern, daß durch einen Geräte- oder Teiledefekt Personen- und/oder Sachschäden verursacht werden (z.B. geeigneter Schutz gegen das Herunterfallen des Motors etc.).

Ces machines sont réalisées avec des matériaux qui NE SONT PAS aptes au transport de produits alimentaires.
Il est en outre interdit de les mettre en service avant que le silo/installation dans lequel ils doivent être montées a été déclarée conforme aux dispositions de la Directive 98/37/CE et les directives nationales en vigueur.
Dans ce cadre il est la responsabilité du constructeur de l'installation ou de l'installateur de projeter et d'installer tout équipament de protection nécessaire afin d'eviter que des ruptures et / ou des parties d'elle puissent causer de dégâts à des personnes et / ou des choses (par ex.: ces protections appropriées contre la chaute du moteur etc.).

Queste macchine sono realizzate con materiali NON idonei al trasporto di prodotti alimentari.
E' inoltre vietato metterle in funzione prima che il silo/impianto nel quale devono essere installate sia dichiarato conforme alle disposizioni della Direttiva 98/37/CE, e alle disposizioni nazionali da attuazione.
In quest'ambito è cura dell'impiantista / installatore predisporre ed installare tutti gli accorgimenti / protezioni al fine di evitare danni a cose o persone in caso di rottura e conseguente caduta di pezzi della macchina (ad es.: rottura del motore).

The WETMIX®V05 mixer operates within the following limits:

Products used
- Water
- Premixed products

Operating temperature
MAX.: 60° / MIN.: 1° C

Mixer water pressure
2.5 bar

- The WETMIX®V05 is designed and constructed exclusively for the purposes indicated in this Manual.

IT IS ABSOLUTELY FORBIDDEN TO USE PRODUCTS OTHER THAN THOSE INDICATED IN THIS MANUAL.

- Avoid all other types of use to ensure machine efficiency and operator safety.
- The WETMIX®V05 must not be employed for purposes other than those indicated in this manual.
- Do not use the WETMIX®V05 unless it is connected to the product supply silo.
  Only a qualified professionally skilled operator must be allowed to operate the WETMIX®V05 in compliance with the applicable legislation.

The plant technician/fitter must adopt suitable safety measures when handling harmful products which are hazardous on contact and/or when inhaled, explosive or harmful from the bacteriological/viral point of view.

Unless otherwise specified, all dimensions are in mm.

Der Mischer WETMIX®V05 übt seine Gebrauchsfunktion im Rahmen der folgenden Grenzen aus:

Benutzte Produkte
- Wasser
- Vorgemischte Produkte

Einsatztemperaturen
MAX.: 60° / MIN.: 1° C

Wasserdruck für Mischerbeaufschlagung
2.5 bar

- WETMIX®V05 ist nur für den in diesem Handbuch genannten Einsatz entwickelt und konstruiert worden.

ES IST STRIKT VERBOTEN, ANDERE PRODUKTE ZU BENUTZEN, ALS DIE IN DIESEM HANDBUCH ANGEGEBENEN.

- Jede andere Art von Einsatz oder Gebrauch als die in diesem Handbuch beschriebene ist verboten, um die Effizienz der Maschine und die Sicherheit ihres Bedieners zu gewährleisten.
- Der Einsatz und Gebrauch von WETMIX®V05 für bestimmungswidrige oder von denen in diesem Handbuch vorgesehenen Gebräuchen ist verboten.
- Die Inbetriebnahme von WETMIX®V05 ist verboten, wenn die Maschine nicht an den Silo zur Produktbeschickung angeschlossen ist.
- WETMIX®V05 darf ausschließlich durch von dem beauftragten Bediener benutzt werden, der fachlich dazu geeignet ist und die geltenden gesetzlichen Bestimmungen beachtet.

Für gefährliche, beim Berühren und/oder Einatmen schädliche, brennbare, explosive oder unter bakteriologischen und/oder virologischen Gesichtspunkten gefährliche Produkte müssen der Anlagenbauer bzw. Installateur geeignete Sicherheitsvorrichtungen vorsehen.

Wenn nicht anders angegeben, verstehen sich alle Abmessungen in Millimetern.

Le mélangeur WETMIX®V05 exerce sa propre fonction d'utilisation dans le respect des limites suivantes:

Produits utilisés
- Eau
- Produits prémélangés

Températures d'utilisation
MAXI: 60°C / MINIMUM: 1°C

Pression eau d'alimentation mixer
2.5 bar

- Le WETMIX®V05 a été projeté et réalisé exclusivement pour la destination d'usage indiquée dans le présent manuel.

IL EST ABSOLUMENT INTERDIT D'UTILISER DES PRODUITS DIFFÉRENTS DE CEUX INDIQUÉS DANS LE PRÉSENT MANUEL.

- Pour garantir l'efficacité de la machine et la sécurité de l'opérateur préposé, tout autre type d'intervention et d'utilisation est interdit.
- L'emploi du WETMIX®V05 pour des utilisations impropres et différentes de celles prévues dans le présent manuel est interdit.
- Il est interdit de mettre en service le WETMIX® V05 s'il est débranché du silo d'alimentation du procuit.
- Le WETMIX®V05 doit être utilisé exclusivement par un opérateur préposé, professionnellement apte et dans le respect de la législation en vigueur.

Pour les produits dangereux, nocifs au contact et/ou à l'inhalation, inflammables, explosifs et dangereux du point de vue bactériologique et/ou viral, le responsable de l'installation et/ou l'installateur doivent prévoir des dispositifs de sécurité appropriés.

Sauf indication contraire, toutes les dimensions sont en millimètres.

Il mescolatore WETMIX®V05 esercita la propria funzione d' uso nel rispetto dei seguenti limiti:

Prodotti utilizzati
- Acqua
- Prodotti premiscelati

Temperature di utilizzo
MASSIMA: 60° / MINIMA: 1° C

Pressione acqua di alimentazione mixer
2.5 bar

- Il WETMIX®V05 è stato progettato e realizzato esclusivamente per la destinazione d'uso riportata nel presente manuale.

E' ASSOLUTAMENTE VIETATO L'IMPIEGO DI PRODOTTI DIVERSI DA QUELLI INDICATI NEL PRESENTE MANUALE.

- **E' vietato** ogni altro tipo di impiego e utilizzo per garantire l'efficienza della macchina e la sicurezza dell'operatore addetto.
- **E' vietato** l'impiego e utilizzo del WETMIX®V05 per usi impropri e diversi da quelli previsti nel presente manuale.
- **E' vietato** la messa in servizio del WETMIX®V05 se scollegato dal silo di alimentazione del prodotto.
- Il WETMIX®V05 deve essere utilizzato esclusivamente da un operatore incaricato, professionalmente idoneo nel rispetto della legislazione vigente.

Per prodotti pericolosi, nocivi al contatto e/o all'inalazione, infiammabili, esplosivi e pericolosi dal punto di vista batteriologico e/o virale, l'impiantista e/o l'installatore, dovranno prevedere idonei dispositivi di sicurezza.

Se non specificato altrimenti tutte le dimensioni sono in millimetri.

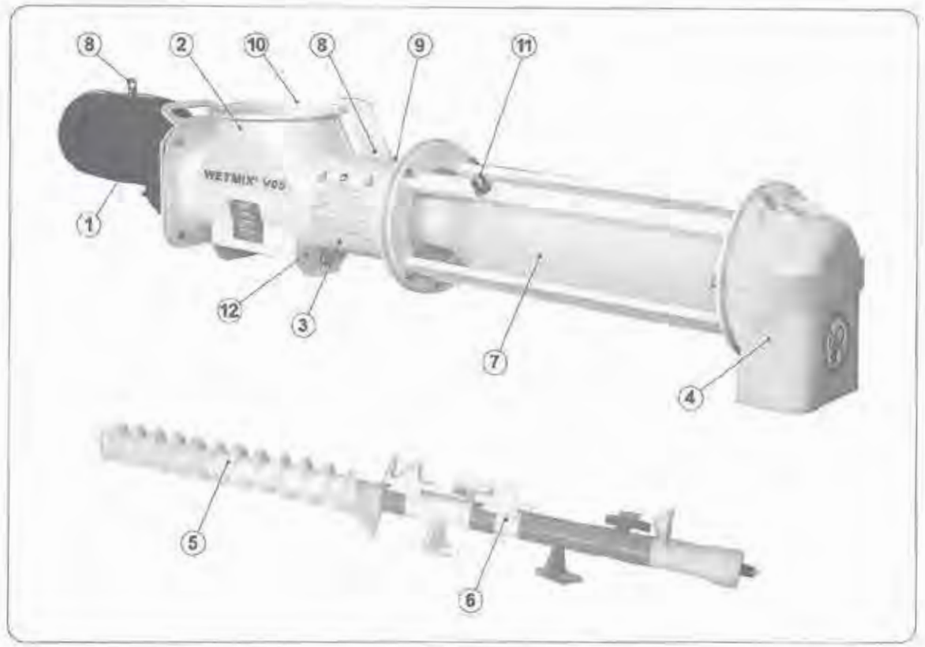

1	GEAR REDUCER	GETRIEBEEINHEIT	REDUCTEUR	TESTATA MOTRICE	L17
2	INLET SPOUT	EINLAUF	BOUCHE D'ENTREE	BOCCA CARICO	XBC
3	TUBULAR HOUSING	AUSSENROHR	TUBE EXTERIEUR	CORPO ESTRAZIONE	/
4	OUTLET SPOUT	AUSLAUF	BOUCHE DE DÉCHARGEMENT	BOCCA SCARICO	/
5-6	SCREW AND MIXER SHAFT	MISCHWERK	SPIRE ET ROTOR	SPIRA E ROTORE	/
7	MIXING CHAMBER	MISCHKAMMER	CHAMBRE DE MÉLANGE	CAMERA DI MESCOLAZIONE	/
8	LIFTING EYE	KRANÖSE	OEILLET	GOLFARO	/
9	SERIAL NUMBER	PRODUKTIONSNUMMER	NUMERO MATRICULAIRE	NUMERO MATRICOLA	/
10	SILO CONNECTION FLANGE	SILOANSCHLUSSFLANSCH	BRIDE DE FIXATION SILO	FLANGIA ATTACCO SILO	XKF
11	WATER SUPPLY POINT	WASSERANSCHLUSS	ENTREE LIQUIDE	RACCORDO INGRESSO ACQUA	/
12	OPENABLE BOTTOM	ABKLAPPBARER BODEN	FOND OUVRABLE	FONDO APRIBILE	XKA
13	POWER CABLE WITH 3P+T PLUG	STROMKABEL MIT STECKER 3P+E	CABLE ÉLECTRIQUE AVEC FICHE 3P+T	CAVO ELETTRICO CON SPINA 3P+T	

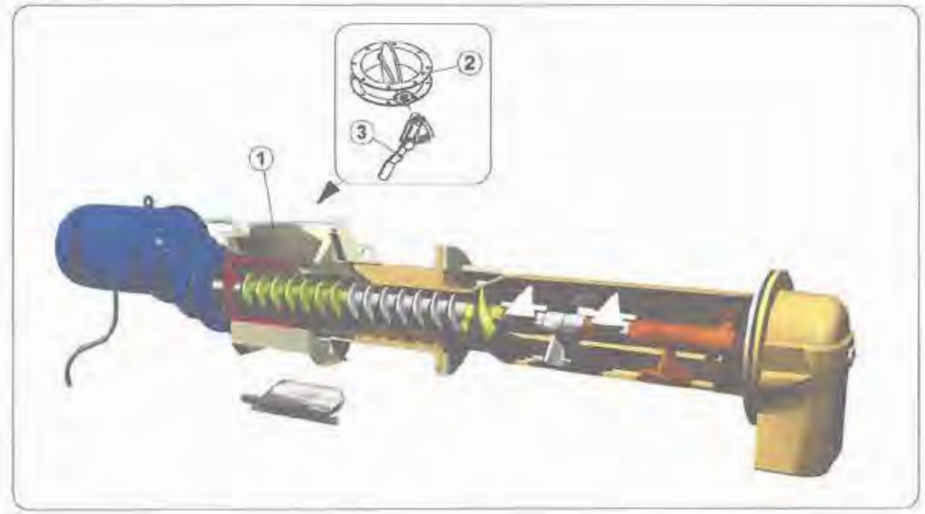

1	BRIDGE-BREAKER	BRÜCKENBRECHER	BRISE-PONT	ROMPIPONTE
2	BUTTERFLY VALVE	ABSPERRKLAPP	VANNE PAPILLON	VALVOLA A FARFALLA
3	BUTTERFLY VALVE WITH ADJUATABLE FLANGE	ABSPERRKLAPPE MIT DREHFLANSCH ERHALTLICH	VANNE PAPILLON AVECBRIDEORIENTABLE	VALVOLA A FARFALLA CON FLANGIA GIREVOLE
4	MANUAL ACTUATOR	HANDHEBEL-DREHANTRIEB	ACTIONNEUR MANUEL	COMANDO MANUALE
5	GASKET FOR SILO CONNECTION FLANGE	DICHTUNG FÜR SILOANSCHLUSSFLANSCH	JOINT POUR BRIDE DE RACCORD SILO	GUARNIZIONE PER FLANGIA ATTACCO SILO
6	ELECTRICAL EXTENSION	ELEKTRISCHES VERLÄNGERUNGSKABEL	RALLONGE ÉLECTRIQUE	PROLUNGA ELETTRICA
7	WATER PIPE EXTENSION	VERLÄNGERUNG DES WASSERROHRS	RALLONGE TUYAU D'EAU	PROLUNGA TUBO ACQUA

①	②	③	④	⑤	⑥	⑦	⑧
WML	-	-	-	----	-	-	---

Sector / Type of machine - *Sektor/Maschinentyp*
Secteur/Type machine - *Settore/ Tipo macchina*

L = Mortar V05
Eisen / V05

Material - *Werkstoff*
Matériau - *Materiale*

1= Iron - *Eisen* - Fer - *Ferro*

Lenght - *Länge*
Longueur - *Lunghezza*

S = STD
L = Long - *lang* - longue - *lunga*

Inlet spout dimension - *Abmessungen des Einlaufs*
Dimension bouche de chargement - *Dimensione bocca carico*

273

Type of inlet spout - *Typ des Einlaufs*
Type bouche de chargement - *Tipo bocca carico*

A = STD

Screw pitch - *Wendelsteigung* - Pas hélice - *Passo elica*

1 = 1/1
2 = 2/3
3 = 1/2

Type of shaft - *Tipo albero*
Type arbre - *Tipo albero*

DA = STD short - *kurz* - court - corto WML
DB = STD long - *lang* - long - *lungo WML*
EA = STD short WML - *Basis kurz WML* - Base court WML - *Base corto WML*
EB = STD long WML - *Basis lang* WML - Base long WML - *Base lungo WML*

⑨	⑩	⑪	⑫	⑬	⑭	⑮	⑯
-	---	----	--	-----	--	-	----

Type of gear reducer - *Typ Getriebeeinheit*
Type de tête - *Tipo testata*

L17
M17
+++ without gear reducer - *ohne Getriebe*
sans réducteur - *Senza riduttore*

Motor electric cable
Stromkabel Motor
Câble électrique moteur
Cavo elettrico motore

+= Whitout - *Ohne* - Sans - *Senza*
A= With 3P plug + T (std) - *Mit Stecker 3P + T (std)*
Avec fiche 3P + T (std) - *Mit Stecker 3P + T (std)*
B= With 3P plug + T + N - *Mit Stecker 3P + T + N*
Avec fiche 3P + T + N - *Con spina 3P + T + N*

Frequency - *Frequenz*
Fréquence - *Frequenza*

+++ = Whitout - *Ohne* - Sans - *Senza*
50
60

Voltage - *Spannung*
Tension - *Tensione*

+++ = Whitout motor - *Ohne motor* - Sans moteur - *Senza motore*
230
400

No. of poles - *N° pole*
N° pôles - *N° poli*

Whitout motor - *Ohne motor* - Sans moteur - *Senza motore*
04 = 4 poles - *polig* - pôles - *poli*

Power - *Leistung*
Puissance - *Potenza*
(from-da-de-da W)

Whitout motor - *Ohne motor* - Sans moteur - *Senza motore*
0300
0400
0550

Gear ratio - *Betriebsuntersetzung*
Rapport réduction - *Rapporto riduzione*

05 = 1/5

Type of outlet spout - *Typ des Auslaufs*
Type bouche déch. - *Tipo bocca scarico*

X = 1/1 Outer bushing - *Außenbuchse* - Fourreau extérieur - *Boccola esterna*
Y = 2/3 Outer bushing - *Außenbuchse* - Fourreau extérieur - *Boccola esterna*

3	T	N	T	N

	Finishing	*Finish*	Finissage	*Finitura*
3	external grit blasting SA 2,5	*außen Stahlstrahlen SA 2,5*	sablage extérieur SA 2,5	*granigilatura esterna SA 2,5*

INTERNAL - *INNEN* - INTERIEUR - *INTERNO*

		Paint	*Anstrich*	Peinture	*Verniciatura*
T	80 µm=	SA 2,5 + powder (polyester)	*SA 2,5 + Pulverbeschichtung (Polyester)*	SA 2,5 + peinture aux poudres (polyester)	*SA 2,5 + verniciatura a polvere (poliestere)*

		Paint colour	*Farbton Anstrich*	Tonalité	*Tonalità*
N	RAL 9010	pure white	*Reinweiß*	blanc pur	*bianco puro*

EXTERNAL - *AUSSEN* - EXTERIEUR - *ESTERNO*

		Paint	*Anstrich*	Peinture	*Verniciatura*
T	80 µm	SA 2,5 + powder (polyester)	*SA 2,5 + Pulverbeschichtung (Polyester)*	SA 2,5 + peinture aux poudres (polyester)	*SA 2,5 + verniciatura a polvere (poliestere)*

		Paint colour	*Farbton Anstrich*	Tonalité	*Tonalità*
N	RAL 9010	pure white	*Reinweiß*	blanc pur	*bianco puro*

NOTE
1) The gear reducers are painted with HS RAL 5010 (gentian blue) paint.

ANMERKUNGEN
1) Die Getriebe haben einen Anstrich mit HOHEM FESTSTOFFGEHALT RAL in 5010 (Enzianblau)

REMARQUE
1) Les têtes motrices sont peintes avec de la peinture HAUT SOLIDE RAL 5010 (bleu gentiane)

NOTE
1) Le testate motrici sono verniciate con vernice ALTO SOLIDO RAL 5010 (blu genziana)

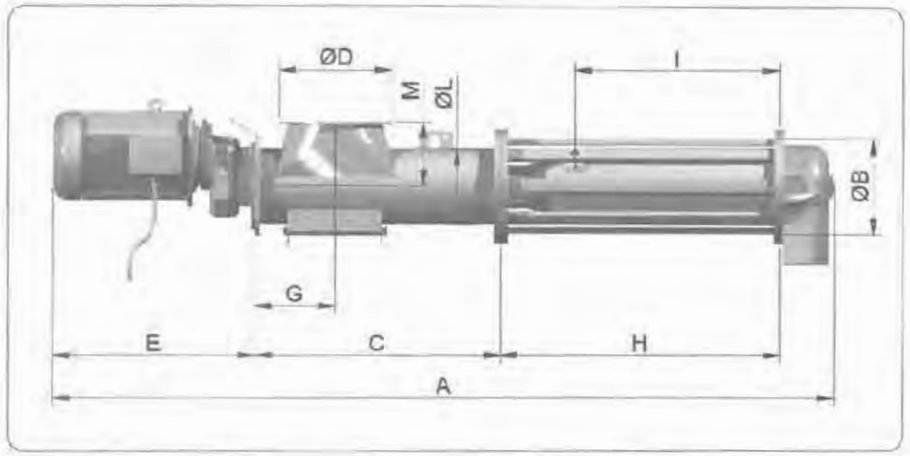

Code	A	ø B	C	ø D	E	G	H	I	ø L	M	kg
WML1S_ _ _ _ (4.0 kW)	1880	273	700	273	355	226	650	442	219	186	130
WML1S_ _ _ _ (5.5 kW)	2115	273	700	273	590	226	650	442	219	186	146
WML1L_ _ _ _ (4.0 kW)	2030	273	700	273	355	226	800	587	219	186	135
WML1L_ _ _ _ (5.5 kW)	2265	273	700	273	590	226	800	587	219	186	151

Dimensions in mm

WAM®

WETMIX® V05

- DIMENSIONS AND TYPE OF INLET SPOUT
- ABMESSUNGEN UND TYP DES EINLAUF
- DIMENSIONS ET TYPE DE BOUCHE DE CHARGEMENT
- DIMENSIONI E TIPO DI BOCCA DI CARICO

⑤ ⑥

10.05

1

WA.02532 T.12

In order codes boxes 5 and 6, the type of inlet spout can be selected from among dimensions:
-273

Im Feld 5 und 6 des Bestellcodes kann man den Typ des Einlaufs unter den Dimensionen wählen:
-273

Dans le champ 5 et 6 du code de commande choisir la typologie de la bouche de chargement parmi les dimensions :
-273

Nel campo 5 e 6 del codice di ordinazione è possibile scegliere la tipologia della bocca di carico tra le dimensioni.
-273

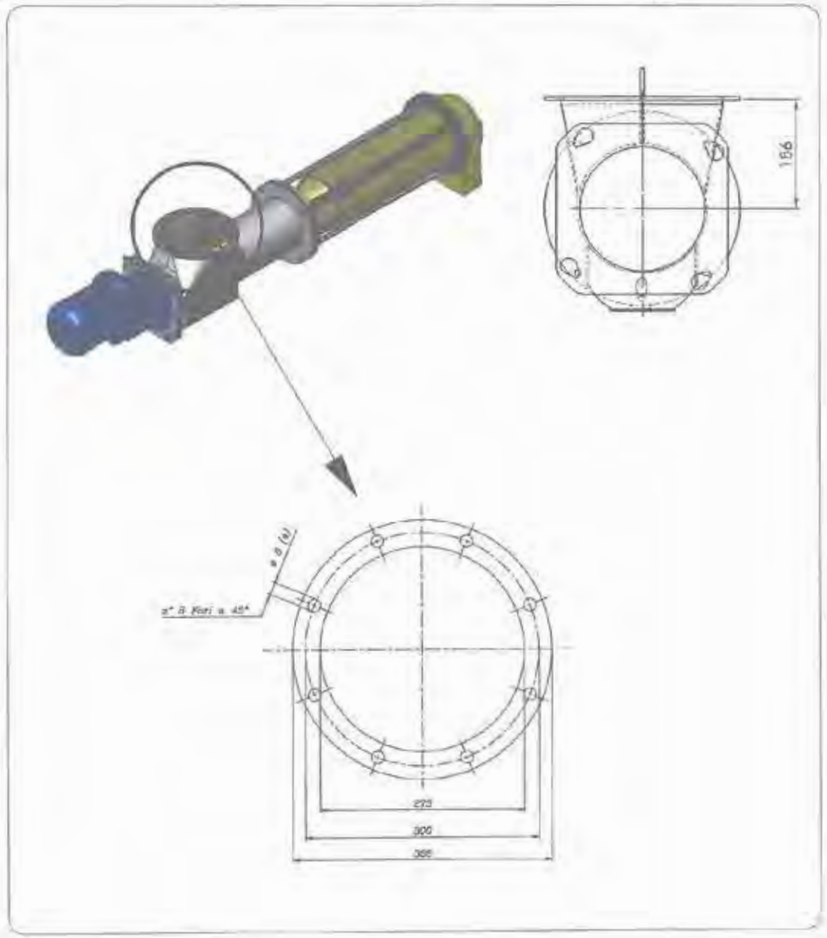

WAM®

WETMIX® V05

- SCREW PITCH
- WENDELSTEIGUNG
- PAS SPIRE
- PASSO ELICA

⑦

10.05

1

WA.02532 T.13

In order code box 7, the batching screw pitch can be selected as required; the pitches available are
1= 1/1
2= 2/3
3= 1/2 (Std.)
To determine the rated throughput, refer to the respective data in the Table.

Im Feld 7 des Bestellcodes kann man die Steigung der Dosierwendel je nach den eigenen Erfordernissen wählen; folgende Steigungen stehen zur Verfügung:
1= 1/1
2= 2/3
3= 1/2 (Standard)
Für die Festlegung der Nennfördermenge ist Bezug auf die entsprechenden Daten der Tabelle zu nehmen.

Dans le champ 7 du code de commande il est possible de choisir le pas de l'hélice de la spire de dosage en fonction de ses propres exigences, les pas disponibles sont:
1= 1/1
2= 2/3
3= 1/2 (base)
Pour la détermination du débit nominal faire référence aux données respectives dans le tableau.

Nel campo 7 del codice di ordinazione è possibile scegliere il passo dell'elica della spira di dosaggio in funzione delle proprie esigenze, i passi disponibili sono:
1= 1/1
2= 2/3
3= 1/2 (base)
Per la determinazione della portata nominale fare riferimento ai rispettivi dati in tabella.

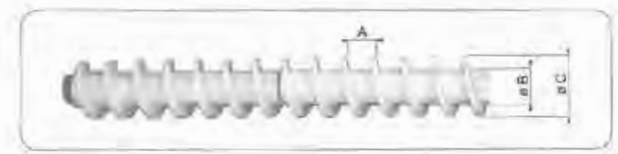

Order code Ref. *Bez. Bestellcode* Réf. code de commande *Rif. codice di ordinazione*	A	ø B	ø C	kg
1	100	60	100	2.5
2	62.5	60	100	2.8
3	50	60	100	3

Dimension in mm

SCREW PITCH *SCHNECKENSTEIGUNG* PAS SPIRE *PASSO ELICA*	GEAR RATIO *GETRIEBEUNTERSETZUNG* RAPPORT DE REDUCTION *RAPPORTO RIDUTTORE*	THEORETICAL CAPACITY *THEORETISCHE LEISTUNG* DEBIT THEORIQUE *PORTATA TEORICA* l/min
1/2 2/3 1/1	1/5 1/5 1/5	40 60 100
1/2 2/3 1/1	1/7 1/7 1/7	28 43 72

In order code box 8, it is possible to select from among four different mixer shaft configurations:

DA: STD short WML
DB: STD long WML
EA: STD short WML
EB: STD long WML

Configurations DB and DA are suitable for normal mortars while configurations EA and EB are suitable for difficult mortars.
Maximum mixing can thus be obtained, depending on the product features.

Im Feld 8 des Bestellcodes kann man vier unterschiedliche Konfigurationen der Mischerwelle wählen:

DA: Stadard kurz WML
DB: Standard lang WML
EA: Basis kurz WML
EB: Basis lang WML

Die Konfigurationen DB und DA eignen sich für normalen Mörtel, während die Konfigurationen EA und EB sich für schwierigen Mörtel eignen.
Auf diese Weise ist es möglich, je nach den Eigenschaften des Produkts einen optimalen Vermischungsgrad zu erzielen.

Dans le champ 8 du code de commande on peut choisir parmi quatre configurations différentes de l'arbre de mélange :

DA : Std court WML
DB Std long WML
EA : Base court WML
EB : Base long WML

Les configurations DB et DA sont indiquées pour les mortiers ordinaires, tandis que les configurations EA et EB sont indiquées pour les mortiers difficiles.
On peut ainsi obtenir un degré de mélange optimal en fonction des caractéristiques du produit.

Nel campo 8 del codice di ordinazione è possibile scegliere tra quattro differenti configurazioni dell'albero di miscelazione:

DA: Std corto WML
DB: Std lungo WML
EA: Base corto WML
EB: Base lungo WML

Le configurazioni DB e DA sono indicate per malte normali mentre le configurazioni EA ed EB sono indicate per malte difficili.
In questo modo è possibile ottenere un grado di miscelazione ottimale in funzione delle caratteristiche del prodotto.

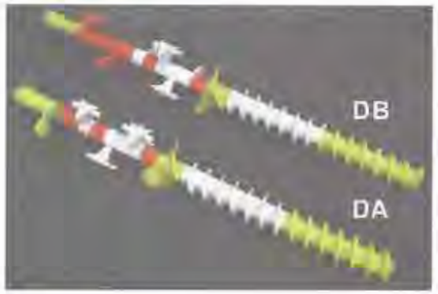

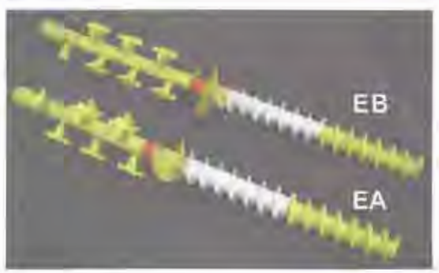

NOTE
Thanks to the modularity of the mixer shaft, its configuration can be customized by selecting the number and type of tools.
For more information, please contact our Engineering-Commercial Dept.

ANMERKUNG
Dank der Modulbauweise der Mischerwelle ist es außerdem möglich, die Konfiguration derselben den eigenen Erfordernissen anzupassen und die Zahl und den Typ der Mischwerkzeuge zu wählen.
Für weitere Informationen mit einem WAM-Verkaufsbüro Kontakt aufnehmen.

REMARQUE
Grâce à la modularité de l'arbre de mélange il en outre possible de personnaliser sa configuration en choisissant le nombre et la typologie des outils.
Pour tout complément d'informations contacter notre Service Technique-Commercial.

NOTA
Grazie alla modularità dell'albero di miscelazione è inoltre possibile personalizzare la configurazione dello stesso scegliendo il numero e la tipologia degli utensili.
Per ulteriori informazioni contattare il nostro Ufficio Tecnico-commerciale.

In order code box 9, it is possible to choose from among

X: outlet spout 1/1
Y: outlet spout 2/3

The bushing is on the outside the mixing chamber and therefore increases its durability.

Im Feld 9 des Bestellcodes kann man folgende Wahl treffen

X: Auslauf 1/1
Y: Auslauf 2/3

Die Buchse befindet sich außerhalb von der Mischkammer, wodurch wird ihre Haltbarkeit erhöht wird.

Dans le champ 9 du code de commande il est possible de choisir entre :

X: bouche de déchargement 1/1
Y: bouche de déchargement 2/3

Le fourreau est extérieur à la chambre de mélange et ceci augmente sa durée dans le temps.

Nel campo 9 del codice di ordinazione è possibile scegliere tra

X: bocca di scarico 1/1
Y: bocca di scarico 2/3

La boccola è esterna alla camera di miscelazione e ciò ne incrementa la durata nel tempo.

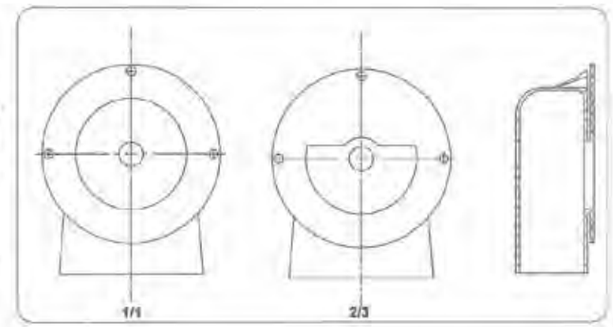

ø A	B	C	D	E	Outlet section - *Auslaufquerschnitt* Section sortie - *Sezione scarico*	kg
205	267	222.5	120	120	2 / 3	4.5
205	267	222.5	120	120	1 / 1	4.5

Dimensions in mm

N.B.: Outlet has to be considered a residual risk
N.B.: Der Auslauf ist als Restrisiko zu betrachten
N.B.: La bouche de sortie représente un risque résiduel
N.B.: La bocca di scarico rappresenta un rischio residuo

The outlet is made from SINT®ER and is fitted on the end flange of the mixing chamber.

The outlet spout is constructed in conformity with the safety requisites of standard pr EN 12151

Die Auslaufeinheit aus SINT®ER ist durch Schrauben am Endflansch der Mischkammer befestigt.

Der Auslauf ist in Übereinstimmung mit den Sicherheitsanforderungen der Norm pr EN 12151 konstruiert.

L'unité de déchargement réalisée en SINT®ER est montée sur la bride d'extrémité du tube.

La bouche de déchargement est construite conformément aux conditions de sécurité de la norme pr EN 12151

L'unità di scarico realizzata in materiale SINT®ER è montata sull'anello terminale della camera di miscelazione.

La bocca di scarico è costruita in conformità ai requisiti di sicurezza della norma pr EN 12151

Item Pos.	Description - *Benennung* Description - *descrizione*	Material - *Werkstoff* Matériau - *Materiale*
1	Bushing support - *Buchsenhalter* Porte fourreau - *Portaboccola*	Aluminium alloy - *Aluminiumlegierung* Alliage d'aluminium - *Lega di alluminio*
2	Bushing - *Buchse* - Fourreau - *Boccola*	PTFE

⑪ ⑫ ⑬ ⑭

In order code box 1, it is possible to select the motor power from among
0300: 3 kW
0400: 4 kW (STD)
0550: 5.5 kW

Three-phase WAM® motors are used (with the exception of 3 kW which is a single-phase commercial motor with pickup and run condenser).
All these motors have manufactured according to IEC as well as DIN standards as far as junction box connections are concerned.
This means, other electric motor makes can be used providing they conform to the above-mentioned standards without need of changing the gear reducer.
If motors with special technical characteristics are required (voltage, cycles etc.) please contact a WAM® sales office.

Standard features:
- B5 flange mounting
- voltage 230 V (3 kW)
- voltage 230/400 V (4.0 and 5.5 kW)
- frequency 50/60 Hz (4.0 and 5.5 kW); 50 Hz (3 kW)
- 4 poles for shaft speed of 1450 r.p.m. approx.
- insulation class F
- Motor protection IP 55, junction box protection IP 55

Cable glands made of plastic.
Junction box on left side of motor when standing behind fan.
Cable glands below.

* ALLOW FOR ± 50 mm TOLERANCE WITH DIFFERENT MAKES.

N.B.: When mounted on machine motor painted Gentian Blue RAL 5010. As spare part only primer painted.
For spare parts, consult the section concerned.

⑪ ⑫ ⑬ ⑭

Im Feld 11 des Bestellcodes kann man die Motorleistung unter den folgenden Werten wählen:
0300: 3,0 kW
0400: 4,0 kW (Basis)
0550: 5,5 kW

Die verwendeten Motoren sind dreiphasige WAM® Motoren (mit Ausnahme des 3,0 kW-Motors, bei dem es sich um einen handelsüblicher Einphasenmotor mit Kondensator für Anlauf und Betrieb handelt).
Alle diese Motoren entsprechen der europäischen IEC-Norm sowie der DIN, was die Klemmenverbindungen betrifft. Dies ermöglicht es, wahlweise Normmotoren eines anderen Fabrikats einzusetzen, ohne dabei die Getriebeeinheit austauschen zu müssen. Sollte eine Sonderausführung in Bezug auf Betriebsspannung, Frequenz etc. erforderlich sein, bitte mit dem zuständigen WAM® Verkaufsbüro Verbindung aufnehmen.
Die Dreiphasen-Asynchronmotoren sind in der Serienversion wie folgt ausgeführt:

Standardcharakteristiken:
- Bauform B5 gemäß IEC-Norm
- Spannung 230/400 V (4,0 und 5,5 kW)
- Frequenz 50/60 Hz (4,0 und 5,5 kW); 50 Hz (3,0 kW)
- 4-polig bzw. ca. 1450 min⁻¹
- Isolationsklasse F
- Schutzart (Motorgehäuse und Klemmenkasten) IP 55

PG-Verschraubungen aus Kunststoff. Klemmenkasten auf der linken Seite von Lüfterhaube aus gesehen. Kabeleintritte an der Unterseite des Klemmenkastens.

* JE NACH FABRIKAT SIND TOLERANZEN VON ± 50 mm MÖGLICH.

N.B.: Wenn Getriebe am Gerät montiert, Lackierung = enzianblau RAL 5010. Als Ersatzteil nur mit Grundanstrich.
Für die Ersatzteile im entsprechenden Teil nachschlagen.

⑪ ⑫ ⑬ ⑭

Dans le champ 11 du code de commande on peut choisir la puissance du moteur parmi les suivantes :
0300: 3 kW
0400: 4 kW (base)
0550: 5.5 kW

Les moteurs sont de marque WAM® triphasé (à l'exception du 3 kW qui est un moteur monophasé en vente dans le commerce avec condensateur de démarrage et marche).
Tous ces moteurs sont conformes aux normes européennes IEC et DIN en ce qui concerne les connexions dans la boîte à bornes. Ceci signifie que l'utilisateur a la possibilité d'utiliser des moteurs de quelconque marque, pourvu qu'ils soient conformes aux normes, sans devoir démonter le réducteur.
S'il était nécessaire d'utiliser un moteur avec des caractéristiques différentes (tension, fréquence, polarité etc.) le client est prié de contacter un des bureaux commerciaux WAM®

Caractéristiques techniques:
- Forme B5 à flasque
- tension 230 V (3 kW)
- tension 230/400 V (4.0 et 5.5 kW)
- fréquence 50/60 Hz (4.0 et 5.5 kW); 50 Hz (3 kW)
- 4 pôles pour une vitesse de rotation de 1450 min⁻¹ environ.
- Classe d'isolation F
- Protection moteur IP 55, protection boîte à bornes IP 55

Presse-étoupe en plastique.
Boîte à bornes sur le côté gauche du moteur (vu du carter).

* AVEC DES MARQUES DIVERSES AVEC TOLERANCES DE FABRICATION DE ± 50 mm.

N.B.: Monté sur la machine peint en en Bleu Gentiane RAL 5010. En pièce de rechange revêtu d'une couche antirouille.
Pour les pièces détachées consulter la section prévue à cet effet.

⑪ ⑫ ⑬ ⑭

Nel campo 11 del codice di ordinazione è possibile scegliere la potenza del motore tra le seguenti:
0300: 3 kW
0400: 4 kW (base)
0550: 5.5 kW

I motori utilizzati sono di marca WAM® trifase (ad eccezione del 3 kW che è un motore monofase commerciale con condensatore di spunto e marcia). Tutti questi motori sono conformi alle norme europee IEC nonché alle norme DIN per quanto riguarda gli attacchi (pressacavi) nelle morsettiera. Ciò significa che l'utilizzatore ha la possibilità di impiego di motori di qualsiasi marca, purché siano a norma, senza dover cambiare testata motrice.
Qualora dovesse essere necessario l'impiego di un motore con caratteristiche diverse (voltaggio, frequenza, polarità, acc.) siete pregati di contattare uno degli Uff. Tecnico-Commerciali WAM®.

Caratteristiche tecniche:
- forma costruttiva B5 a flangia
- voltaggio 230 V (3 kW)
- voltaggio 230/400 V (4.0 e 5.5 kW)
- frequenza 50/60 Hz (4.0 e 5.5 kW); 50 Hz (3 kW)
- 4 poli per una velocità di rotazione di 1450 min⁻¹ ca.
- classe isolamento F
- protezione motore IP 55, protezione morsettiera IP 55

I pressacavi sono in plastica.
La morsettiera si trova sul lato sinistro del motore (visto dal carter).

* CON MARCHE DIVERSE SONO POSSIBILI TOLLERANZE DI ±50 mm.

N.B., montato sulla macchina è verniciato in blu genziana RAL 5010, come ricambio è verniciato in antiruggine.
Per le parti di ricambio consultare l'apposita sezione.

⑮

MOTOR ELECTRIC CABLE
In order code box 15, select the type of motor power cable and plug:
+: no electric cable
A: with 3P+T plug (16A, 380-415V, IP 67)
B: with 3P+T+N plug (16A, 380-415V, IP 67)

⑮

STROMKABEL DES MOTORS
Im Feld 15 des Bestellcodes kann man den Typ des Steckers und des Stromkabels für den Motor wählen:
+: ohne Stromkabel
A: mit Stecker 3P+E (16A, 380-415 V, IP 67)
B: mit Stecker 3P+E+N (16 A, 380-415 V, IP 67)

⑮

CABLE ELECTRIQUE MOTEUR
Dans le champ 15 du code de commande on peut choisir le type de fiche et de câble d'alimentation moteur :
+: sans câble électrique
A: avec fiche 3P+T (16A, 380-415V, IP 67)
B: avec fiche 3P+T+N (16A, 380-415V, IP 67)

⑮

CAVO ELETTRICO MOTORE
Nel campo 15 del codice di ordinazione è possibile scegliere la tipologia della spina e del cavo di alimentazione motore:
+: senza cavo elettrico
A: con spina 3P+T (16A, 380-415V, IP 67)
B: con spina 3P+T+N (16A, 380-415V, IP 67)

In order code box 16, select the type of gear reducer:
- L17 (STD)
- M17

Both gear reducers (for 4.0 and 5.5 kW only) are designed and constructed by WAM®.
For the overall dimensions, refer to the following drawings:

Im Feld 16 des Bestellcodes kann man den Getriebetyp wählen:
- L17 (Basis)
- M17

Beide Getriebe (nur für 4,0 und 5,5 kW) wurden von WAM® entwickelt und konstruiert.
Für den Platzbedarf ist Bezug auf die folgenden Zeichnungen zu nehmen:

Dans le champ 16 du code de commande il est possible de choisir le type de tête motrice:
- L17 (base)
- M17

Les deux têtes motrices (seulement pour 4,0 et 5,5 kW) ont été projetées et réalisées par WAM®.
Pour les encombrements faire référence aux dessins suivants :

Nel campo 16 del codice di ordinazione è possibile scegliere il tipo di testata motrice:
- L17 (base)
- M17

Entrambe le testate motrici (solo per 4.0 e 5.5 kW) sono state progettate e realizzate da WAM®.
Per gli ingombri fare riferimento ai seguenti disegni:

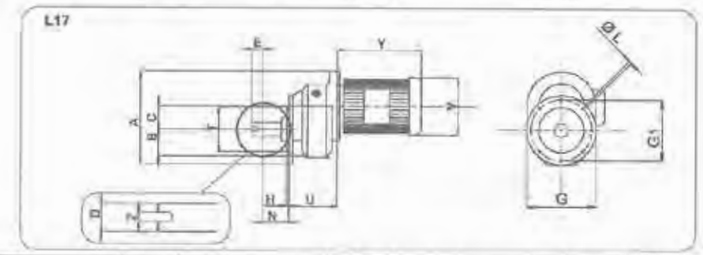

Type	kW	Code	Outlet Austeuf Outlet Uscita	A	B	C	D	E	G	G1	X	L Ø	L N°	N	T	U	V	Y	Z	kg	PG
L 17	4	L1705CM1112M61	CM1	302.5	90	62.5	50	30	250	220	2	M10	8	62.5	182	167	200	316	14	59	21

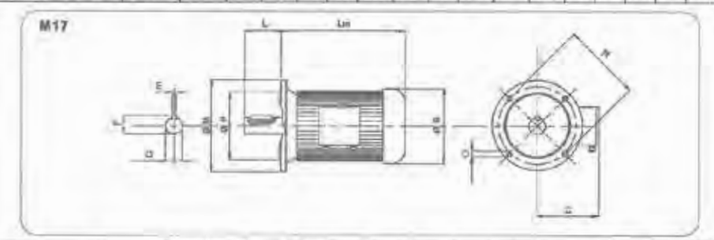

kW	Mot.	Code	C	D	E	F	L	Lm*	M	N	O	n°	P	Q	R	kg	PG
3	100 LH	5751EA0565	142	28	8	31	60	306	250	215	15	4	180	4	218	24	21
4	112 M	MT1120M04145	142	28	8	31	60	334	250	215	15	4	180	4	218	44	21
5.5	132 S	MT1320S04145	172	38	10	41	80	371	300	265	15	4	230	4	258	55	21

Standard Motors 50 Hz - 4 poles / *Standardmotoren 50 Hz - 4-polig*
Moteurs standard 50 Hz - 4 pôles / *Motori standard 50 Hz - 4 poli*

Frame Size	Rated Power (kW)	Freq. (Hz)	Voltage (V)	Current (A)	Poles	Speed (rpm)	Cos φ	Ca/Cn Locked rotor torque/ rated torque	Start capacitor (µF)	Work capacitor (µF)	Ia/In Locked rotor current / rated current	Cmax/ Cn Breakdown torque / rated torque	Weight (kg)
100LH	3.0	50	230	17.7	4	1400	0.86	1.8	80	31.5+400	4.0	1.6	24
112M	4.0	50	230/400	9.0 (400V)	4	1425	0.83	2.2	-	-	7.0	2.3	47
132S	5.5	50	230/400	11.0 (400V)	4	1425	0.83	2.2	-	-	7.0	2.3	68

Standard Motors 60 Hz - 4 poles / *Standardmotoren 60 Hz - 4-polig*
Moteurs standard 60 Hz - 4 pôles / *Motori standard 60 Hz - 4 poli*

Frame Size	Rated Power (kW)	Freq. (Hz)	Voltage (V)	Current (A) (400 V)	Poles	Speed (rpm)	Cos φ	Ca/Cn Locked rotor torque/ rated torque	Start capacitor (µF)	Work capacitor (µF)	Ia/In Locked rotor current / rated current	Cmax/ Cn Breakdown torque / rated torque	Weight (kg)
112M	4.00	60	220/380	8.2	4	1720	0.83	2.0	-	-	7.0	2.1	47
132S	5.50	60	220/380	11.2	4	1730	0.82	2.0	-	-	7.0	2.1	68

Table data refer to continuous service S1- *Tabellenwerte beziehen sich auf Dauerbetrieb S1*
Valeurs au tableau référées au service continu S1 - *I valori riportati in tabella si riferiscono al servizio in continuo S1*

112 = motor size / *Motorgr.* / taille mot. / *gr. mot.* 112 = 4 kW (4 poles / *polig* / pôles / *poli*)
132 = motor size / *Motorgr.* / taille mot. / *gr. mot.* 132 = 5.5 kW (4 poles / *polig* / pôles / *poli*)

Code | M | 1 | 7 | 0 | 5 | | | | C | M | 1 |

05 = ratio / *Untersetzung* / rapport / *rapporto* 1:5

CM1=uscita - uscita
uscita - uscita

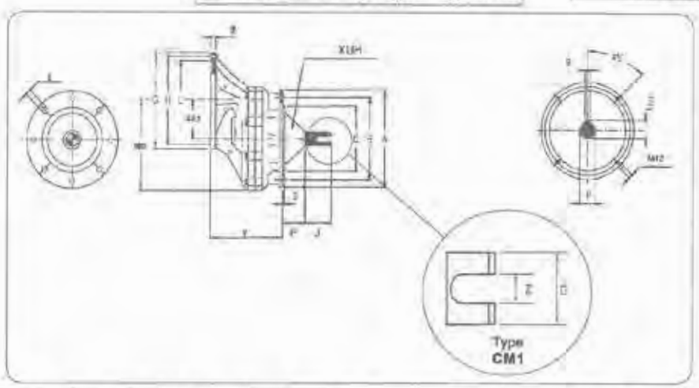

Mot.	Ø G	Ø H	Ø L	P	R	S	V	W	kg
112	250	215	180	28	8	31	164	14	24.0
132	300	265	230	38	10	41	199	14	27.5

Type	Ø A	Ø B	Ø C	Ø D	F	J	Z	E	
								n°	Ø
M1705..CM1	250	220	162	60	62.5	39	14	8	M10

dimensions in mm

GEAR REDUCER SEALING XUH - *GETRIEBEABDICHTUNG XUH* - ETANCHEITE ARBRE TETE MOTRICE XUH - *TENUTA TESTATA MOTRICE XUH*

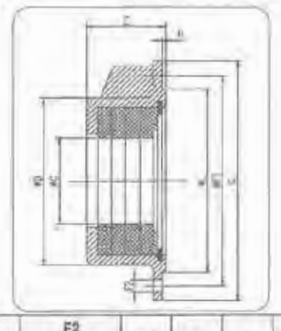

Code	ø C	ø D	E	ø F1	F2		ø G	H	L	kg	Four - *Für* - Pour - *Per*
					ø	N°					
XUH050J4	50	90	57	134	9	5	155	2.5	118	0.5	I.17 - M17 (ES 1-2-3) M12 - M 11

dimensions in mm

N.B.: When mounted on the machine painted Gentian Blue RAL 5010. As spare part only primer painted.

Wenn auf Maschine montiert, Lackierung = ezianblau RAL 5010. Als Ersatzteil nur mit Grundanstrich

N.B.: monté sur la machine il est peint en Bleu Gentiane RAL 5010. Comme pièce de re-change en antirouille.

N.B.: montato sulla macchina è verniciato in BLU GENZIANA RAL 5010, come ricambio è verniciato in antiruggine.

BRIDGE BREAKER - *BRÜCKENBRECHER* - BRISE-PONT - *ROMPIPONTE*

CODE 2099AJ0CB

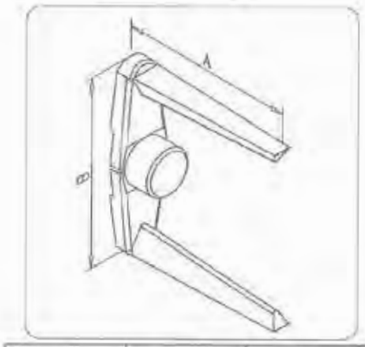

A	B	kg
221	240	0.6

dimensions in mm

BUTTERFLY VALVE WITH TWO CIRCULAR FLANGES, ADJUSTABLE FLANGE
ABSPERRKLAPPE MIT ZWEI RUNDEN FLANSCHEN MIT DREHFLANSCH
VANNE PAPILLON A DEUX BRIDES RONDES
VALVOLA A FARFALLA A DUE FLANGE CIRCOLARI A FLANGIA GIREVOLE

CODE V2FF 250 G34N

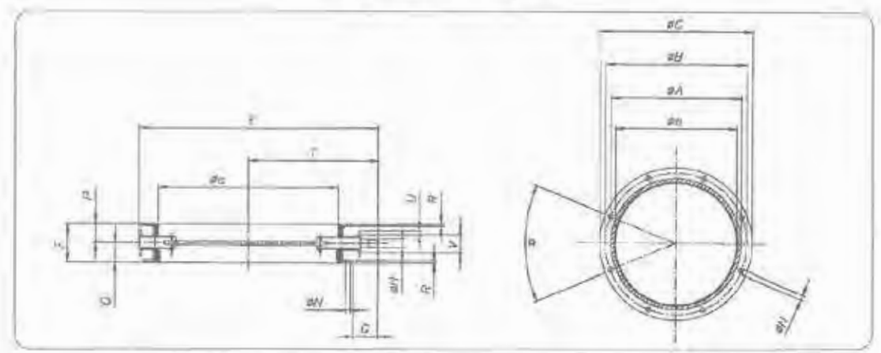

Type	ø a	ø A	ø B	ø C	ø D	F	G	Ø H DIN 5462	N Holes - *Bohrungen* Trous - *Fori*		P	Q	R	α	T	U	V	kg
									Ø	N°								
V2FF250F34N001	240	265	300	328	400	100	50	22xø	13.5	8	50	50	6	45°	214	M12	50	6.6
V2FF250F34N003 (with adjustable flange) *(mit Drehflansch)* (avec bride orientable) *(con flangia orientabile)*	240	265	300	328	400	100	50	22xø	13.5	8	50	50	6	45°	214	M12	50	6.6

Supplied with adjustable flange on request - *Auch mit Drehflansch erhältlich*
Disponible aussi avec bride orientable - *Disponibile anche con flangia orientabile*

dimensions in mm

BUTTERFLY VALVE WITH ROUN FLANGE - *ABSPERRKLAPPE MIT RUNDEN FLANSCHEN*
VANNE PAPILLON A DEUX BRIDES RONDES - *VALVOLA A FARFALLA A DUE FLANGE CIRCOLARI*

CODE V2FF 250 F34N001

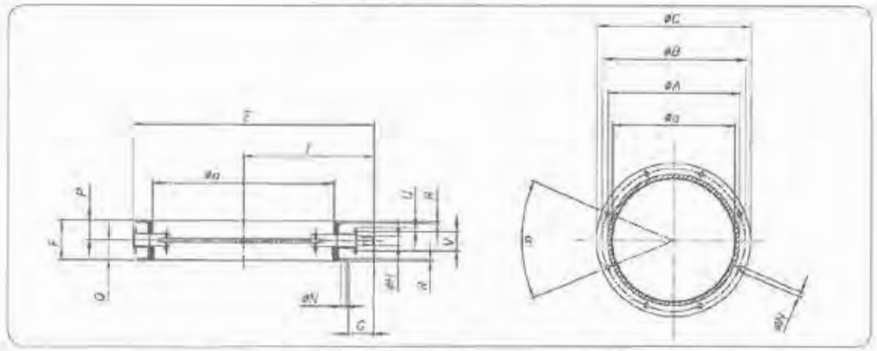

Type	ø s	ø A	ø B	ø C	ø D	F	G	Ø H DIN 5482	N Holes - *Bohrungen* Trous *Fori* Ø	N°	P	Q	R	α	T	U	V	kg
V2FF250F34N001	240	285	300	328	400	100	50	22x9	13.5	8	50	50	6	45°	214	M12	50	8.5
V2FF250F34N003 (with adjustable flange) *(mit Drehflansch)* (avec bride orientable) *(con flangia orientabile)*	240	285	300	328	400	100	50	22x9	13.5	8	50	50	6	45°	214	M12	50	8.5

dimensions in mm

Supplied with adjustable flange on request - *Auch mit Drehflansch erhältlich*
Disponible aussi avec bride orientable - *Disponibile anche con flangia orientabile*

MANUAL ACTUATOR - *HANDHEBEL- DREHANTRIEB* - ACTIONNEUR MANUEL - *ATTUATORE MANUALE*

CODE CM4

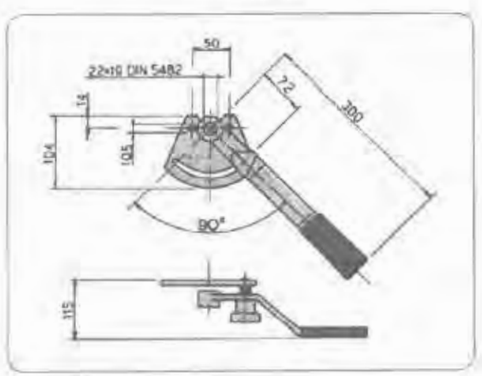

CONTROL PANEL - *STEUERUNG* - PANNEAU DE COMMANDE - *PANNELLO DI CONTROLLO*

CODE WMPC

The control panel is the hydro-electric apparatus meant for handling working of the WETMIX® V05 mixer.
It is also indispensable for correct use of the machine.
It can also handle other accessories, such as, for example, VIBRATOR SILO, WATER PUMP, ETC...
It can be installed on board the machine or set up for attachment to the silo cross.

For more information concerning the WMPC control panel, consult the relevant catalogues available on our website www.wamgroup.com.

Die Schalttafel ist ein elektro-hydraulisches Gerät, das für die Steuerung des Mischers WETMIX® V05 bestimmt ist.
Es ist außerdem ein Instrument, das für die korrekte Benutzung der Maschine gebraucht wird.
Um etwaige weitere Zubehörteile steuern zu können wie beispielsweise RÜTTLER SILO, WASSERPUMPE ETC...
Sie kann auf der Maschine installiert werden oder für den Anschluss am Kreuz des Silos vorgerüstet sein.

Für jede weitere Information zur Steuerung WMPC in den entsprechenden Katalogen nachlesen, die im Web unter der Adresse www.wamgroup.com zur Verfügung stehen.

Le panneau de commande est un équipement électro-hydraulique destiné à la gestion du Mélangeur de mortier WETMIX® V05.
C'est aussi un instrument indispensable pour l'utilisation correcte de la machine.
Il peut éventuellement gérer des accessoires supplémentaires comme, par exemple, VIBRATEUR SILO, POMPE A EAU, ETC...
Il peut être mis en place à bord de la machine ou prévu pour être raccordé au croisillon du silo.

Pour tout complément d'information concernant le panneau de contrôle WMPC consulter les catalogues spéciaux disponibles sur internet à l'adresse www.wamgroup.com.

Il pannello di controllo è una apparecchiatura elettro-idraulica dedicata alla gestione del mescolatore WETMIX® V05.
E' inoltre strumento indispensabile per il corretto uso della macchina.
Può eventualmente gestire ulteriori accessori quali, ad esempio, VIBRATORE SILO, POMPA ACQUA, ECC...
Può essere installato a bordo macchina o predisposto per l'attacco alla crociera del silo.

Per qualsiasi ulteriore informazione relativa al pannello di controllo WMPC consultare gli appositi cataloghi disponibili su internet al sito www.wamgroup.com.

WAM®

WETMIX® V05

- ACCESSORIES
- ZUBEHÖR
- ACCESSORIES
- ACCESSORI -

10.06

1

WA.02532 T.22

ELECTRICAL EXTENSION - *ELEKTRISCHES VERLÄNGERUNGSKABEL* - RALLONGE ELECTRIQUE - *PROLUNGA ELETTRICA*

CODE 3848001215

Cable - *Kabel* - Câble - *Cavo*
H07RNF 4x 2.5 cm
Plug and socket - *Stecker und Steckdose*
Fiche et prise - *Spina e presa*
CE 3P + T 16A 380-415
IP67
L= 50 m

WATER PIPE - *WASSERLEITUNG* - TUYAU D'EAU - *TUBO ACQUA*

CODE 4538020025

Di= 19
De= 27
PN20
Quick Release couplings - *Quick Release Kupplungen*
Raccords à Fixation Rapide - *Attacchi Quick Release*
L=20 m

FLANGE GASKET XKF341 - *DICHTUNG FÜR FLANSCH XKF34*
JOINT POUR BRIDE XKF341 - *GUARNIZIONE PER FLANGIA XKF34*

CODE 2099AETTA

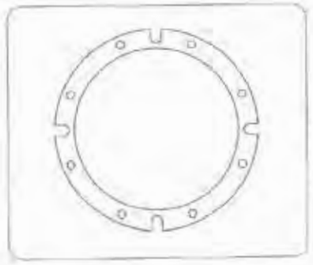

Material - *Werkstoffe*
Matériau - *Materiale*
black EPDM 5 mm thick with adhesive on one side-
EPDM schwarz Stärke 5 mm mit einseitigem Kleber
EPDM noir Epaisseur 5 mm avec adhésif d'un côté
EPDM nero Spessore 5 mm con adesivo da un lato

WAM®

WAM S.p.A.
Via Cavour, 338
I - 41030 Ponte Motta
Cavezzo (MO) - ITALY

☎ +39 / 0535 / 618111
fax +39 / 0535 / 618226
e-mail info@wamgroup.it
Internet www.wamgroup.com
videoconferenze + 39 / 0535 / 49032

HYDRAULIC DRIVE END FOR MIXING AUGER

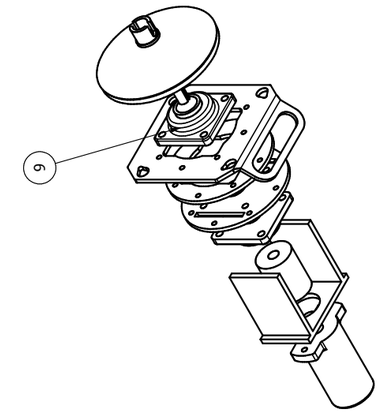

ITEM	QTY	PARTS LIST PART NUMBER	DESCRIPTION
1	1	motor mount plate	PTEHD2W001
2	1	plastic spacer	PTEHD2W002
3	1	removable plate	PTEHD2W003
4	1	spacer plate	PTEHD2W004
5	1	hydraulic motor mount	PTEHD2W005
6	2	1-15/16 bore 4 bolt flange bearing	PTEHD2W006
7	1	shaft	PTEHD2W007
8	1	lovejoy assembly 1 inch L110 L110 Rubber spider 1.25 L110	PTEHD2W008 FULL ASSEMBLY
9	1	hydraulic motor	PTEHD2W009

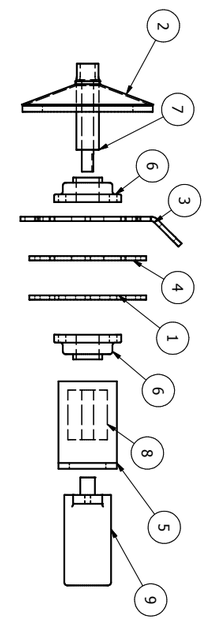

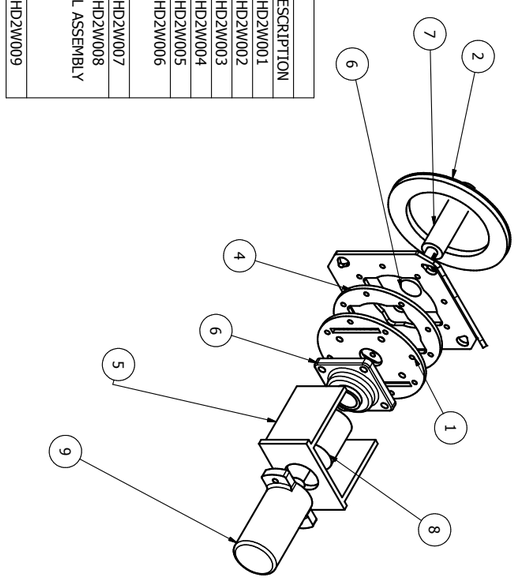

IMPORTANT
GREASE BEARINGS
EVERY 160 HOURS

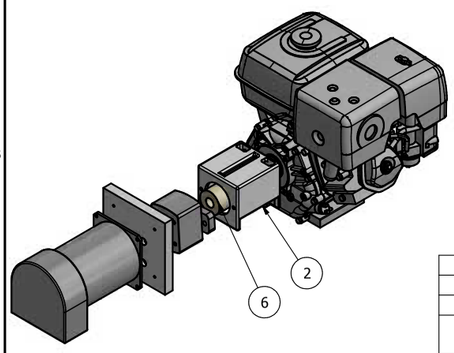

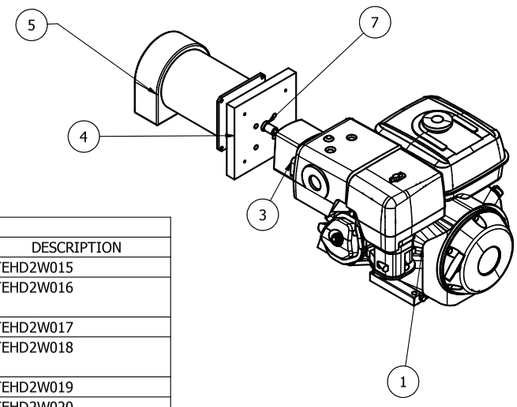

PARTS LIST			
ITEM	QTY	PART NUMBER	DESCRIPTION
1	1	GX390 Electric start/13 HP	PTEHD2W015
2	1	Hydraulic pump mount bracket	PTEHD2W016
3	1	Hydraulic pump	PTEHD2W017
4	1	Generator adapter plate with bearing	PTEHD2W018
5	1	generator/altenator	PTEHD2W019
6	1	lovejoy assembly 1 inch L099 hub with 1/4 key, L099 Rubber spider, L099 hub with 5/32 key	PTEHD2W020
7	1	Generator shaft	PTEHD2W021

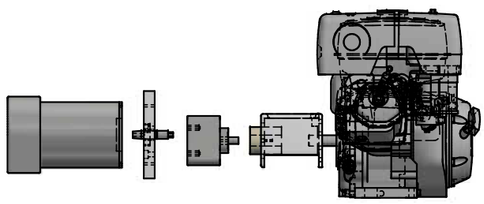

Engine Assembly

PARTS LIST			
ITEM	QTY	PART NUMBER	DESCRIPTION
1	1	electric panel	PTEHD2W010
2	1	electric panel door	
3	1	electric panel buttons power disconnect	PTEHD2W011
4	1	electric panel buttons e-stop	
5	4	electric panel buttons to change from auto to manual	PTEHD2W012
6	2	electric panel buttons push button for cycle start and stop	PTEHD2W013
7	1	TIMER	PTEHD2W014

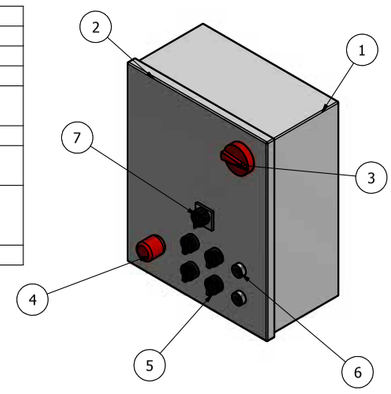

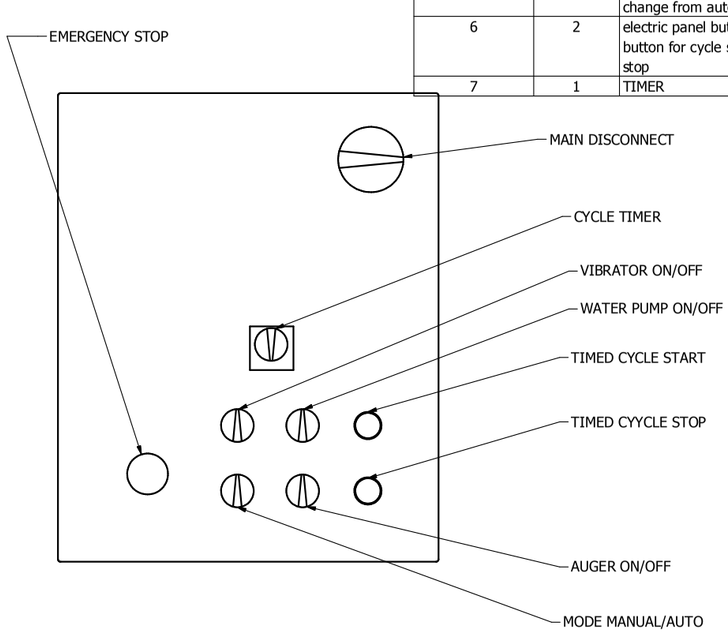

NOTE

TO RUN IN MANUAL PUT SELECTOR SWITCH TO MANUAL AND USE THE 3 OTHER SWITCHS TO TURN DEVISES ON AND OFF.
TO RUN IN AUTO SET TO AUTO, TURN OTHER THREE SWITCHES OFF AND PRESS CYCLE START.
ADJUST THE TIMER DIAL TO THE DESIRED CYCLE RUN TIME.

INSIDE PANEL WILL BE EXTRA RELAYS AND FUSE
THE UNIT WILL BE SHIPPED WITH THE VIBRATOR RELAY PULLED. IT WILL BE INSIDE THE ELECTRIC PANEL. PLEASE CALL FOR ASSISTANCE. 226 818 5990.

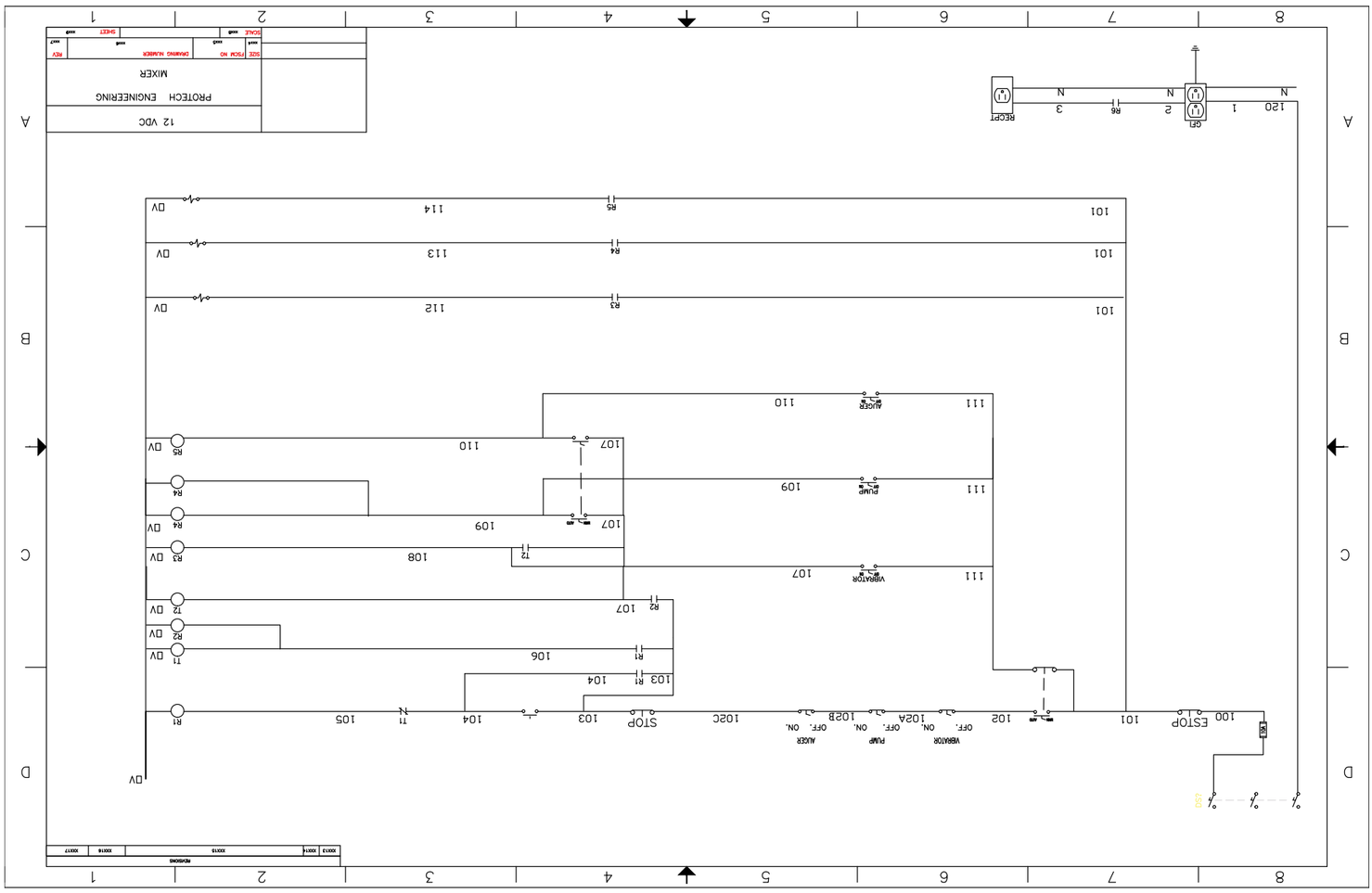

HYDRAULIC D2W ARRANGEMENT

SEE BACK OF MANUAL FOR SPECS
ON THESE PARTS

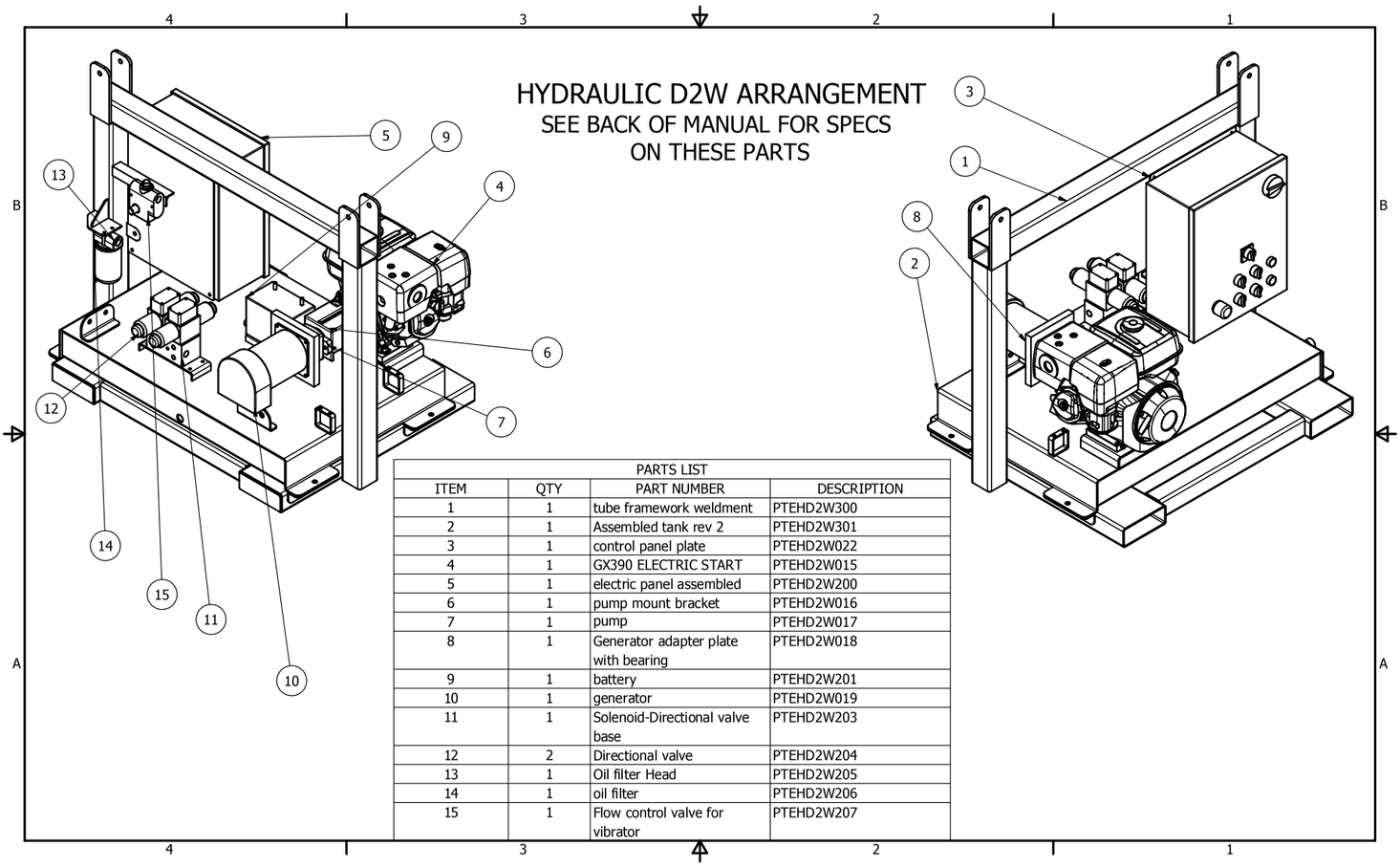

PARTS LIST

ITEM	QTY	PART NUMBER	DESCRIPTION
1	1	tube framework weldment	PTEHD2W300
2	1	Assembled tank rev 2	PTEHD2W301
3	1	control panel plate	PTEHD2W022
4	1	GX390 ELECTRIC START	PTEHD2W015
5	1	electric panel assembled	PTEHD2W200
6	1	pump mount bracket	PTEHD2W016
7	1	pump	PTEHD2W017
8	1	Generator adapter plate with bearing	PTEHD2W018
9	1	battery	PTEHD2W201
10	1	generator	PTEHD2W019
11	1	Solenoid-Directional valve base	PTEHD2W203
12	2	Directional valve	PTEHD2W204
13	1	Oil filter Head	PTEHD2W205
14	1	oil filter	PTEHD2W206
15	1	Flow control valve for vibrator	PTEHD2W207

MEGA

MEGA MODEL MHV HYDRAULIC VIBRATORS

Description:
Mega Hydraulic Vibrators provide very powerful and precisely controlled vibration at a low-noise level and very low operating cost. The bearings are oversized and require no lubrication. This makes the unit almost maintenance-free. Available in bolt-on (MHV-S) or bracket mount (MHV-B), with or without shaft coupling.

Applications:
The MHV Series Vibrators are ideal for use in unloading ships, trucks, and railcars. The powerful vibration force can be put to use anywhere that hydraulic power is available. The MHV Series are also popular in concrete pre-cast operations and on vibrating tables.

Operation and Installation Guidelines:
The MHV Series Hydraulic Vibrator is driven by a Hydraulic Motor designed to operate at pressures between 200 psi and 2000 psi and can be **intermittently** operated at pressures **not exceeding 2500 psi,** with an oil flow of approximately 0.2 to 5 gallons per minute. The **inlet elbow** attached to the hydraulic motor contains a small restrictor plug. **DO NOT** attempt to operate the vibrator without this restrictor plug.

The MHV Series Vibrator provides easy servicing and dismantling with Jack Screw Holes positioned in the cover plates for ease of bearing and cover plate removal. Jack Screw Holes are 1/4" UNC thread. These holes are plugged with button-head allen screws to prevent the ingress of foreign matter.

Lubrication:
Lubrication of the sealed bearings is not required. Consult factory for replacement bearings.

Installation and Operation:
After mounting, the vibrator should be run for approximately 30 seconds. Inspect the mounting bolts or screws and re-tighten if required. Check the mounting bolts again after 30 minutes and periodically after this initial check.

Inlet pressure line should be 3/8" ID.
Return line should be 1/2" ID.
Back pressure not to exceed 1000 psi.
The rpm/frequency can be varied with the use of a 3/8" flow control valve.
Example: Parker-Hannifin F-600-5-10 or equivalent.

MEGA INDUSTRIES INC.
1334 Osprey Drive, Unit 4, Ancaster, Ontario, L9G 4V5

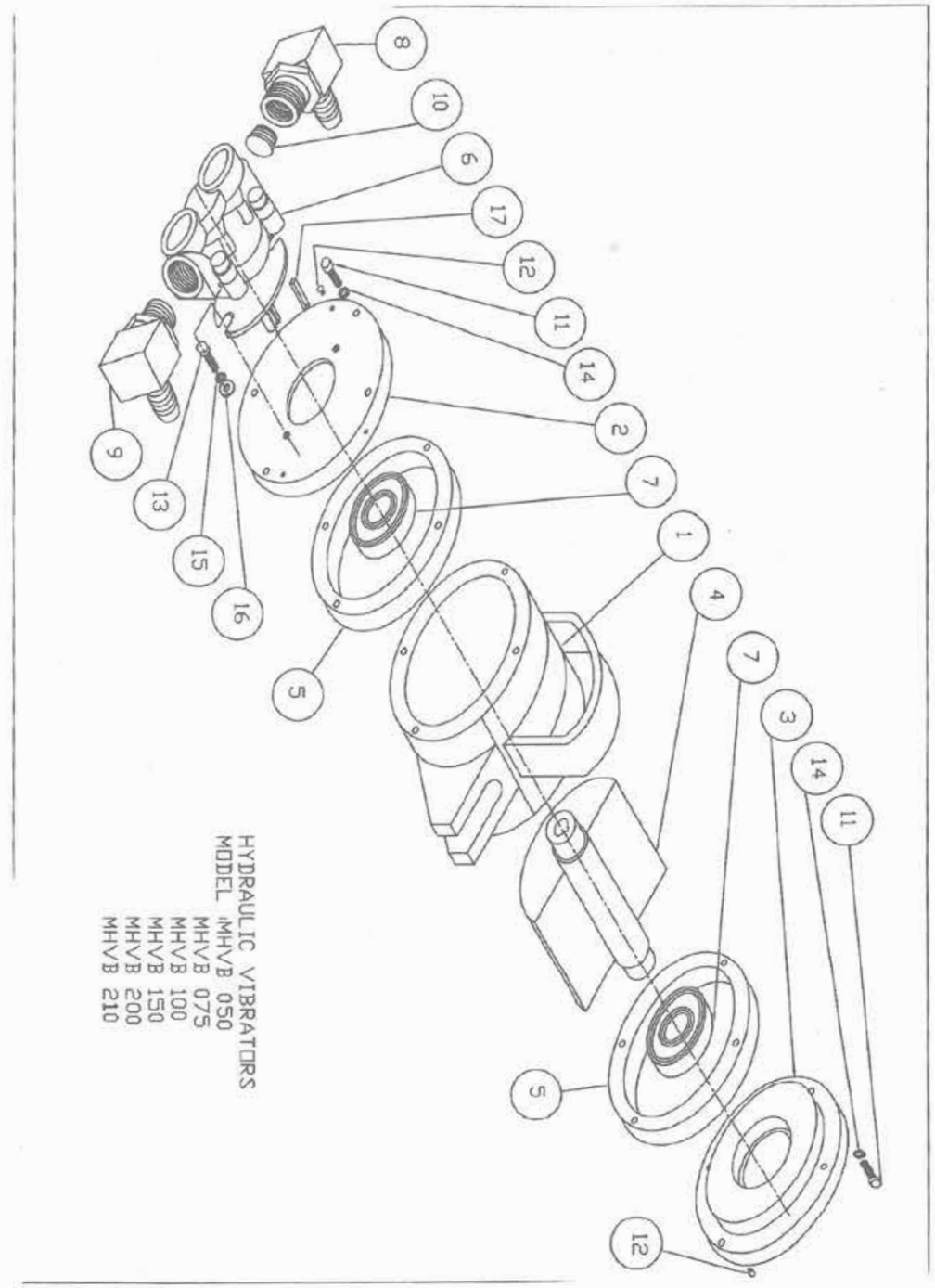

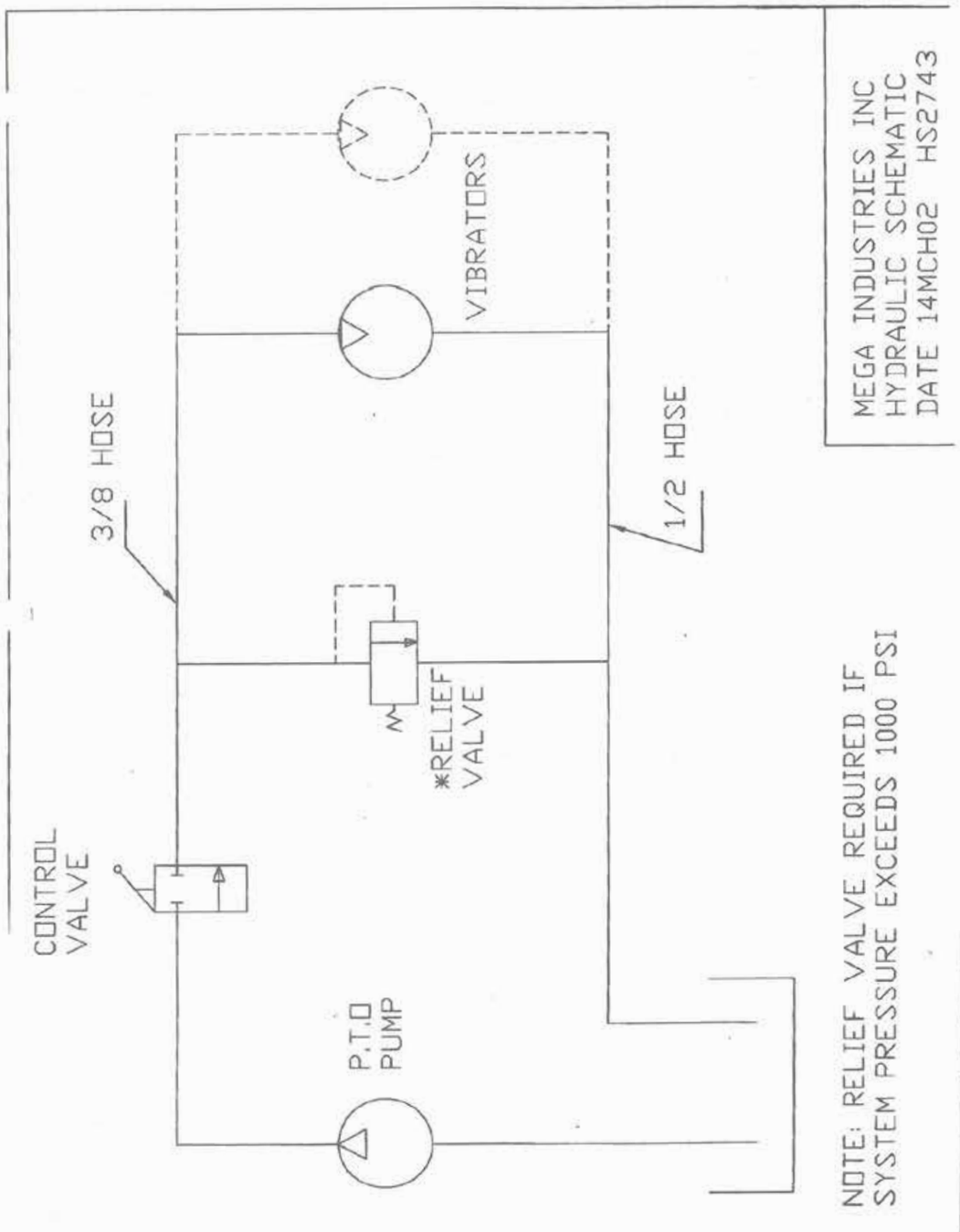

Specifications for MGG2 Series

Description ..... Hydraulic Motors
Flow Range ..... To 16 GPM (56.7 LTR)
Displacements ..... To .700 C.I.R.(11.47 CC's/REV.)
Maximum Pressure to ..... 2000 PSI (137 BAR)
Maximum Speed to ..... 5000 RPM
Rotation ..... Bi-Directional
Bearings ..... Roller
Construction ..... Aluminum

Performance Data

	Pump Model	Displacement/Revolution (Theoretical) US Gallons	Cubic Inches	Liters	Cubic Centimeters	Imperial Gallons	Maximum Continuous Pressure PSI	BAR	Maximum Speed RPM
STANDARD →	MGG20010	.0010	.218	.0039	3.572	.0008	2000	138	5000
OPTION →	MGG20016	.0016	.372	.0062	6.098	.0013	2000	138	5000
	MGG20020	.0020	.450	.0078	7.374	.0018	2000	138	5000
	MGG20025	.0025	.580	.0097	9.505	.0021	2000	138	5000
	MGG20030	.0030	.700	.0116	11.471	.0025	1500	104	5000

When used in series circuits, back pressure is not to exceed 1000 (69.0 BAR) PSIG.

MGG Displacement

MODEL NO.		MGG20010	MGG20016	MGG20020	MGG20025	MGG20030
DISPLACEMENT PER REVOLUTION		.218 in.^{3} (3.57 cm^3)	.372 in.^{3} (6.094 cm^3)	.450 in.^{3} (7.374 cm^3)	.580 in.^{3} (9.50 cm^3)	.700 in.^{3} (11.471 cm^3)
MAXIMUM RATED RPM		5000	5000	5000	5000	5000
RATED FLOW PER 1000 RPM (NOMINAL)		.95 GPM (3.6 liters/min)	1.61 GPM (6.1 liters/min)	1.95 GPM (7.4 liters/min)	2.51 GPM (9.5 liters/min)	3.03 GPM (11.5 liters/min)
MAXIMUM RATED PRESSURE	CONTINUOUS	2000 PSI (138.0 bar)	2000 PSI (138.0 bar)	2000 PSI (138.0 bar)	2000 PSI (138.0 bar)	1500 PSI (103.5 bar)
	INTERMITTENT	2500 PSI (172.5 bar)	2500 PSI (172.5 bar)	2500 PSI (172.5 bar)	2500 PSI (172.5 bar)	2000 PSI (138.0 bar)
OUTPUT TORQUE PER 1000 PSI* (69.0 bar)		35 in.-lbs. (40 kg-cm)	59 in.-lbs. (68 kg-cm)	72 in.-lbs. (83 kg-cm)	92 in.-lbs. (107 kg-cm)	111 in.-lbs. (128 kg-cm)
WEIGHT		2.8 pounds (1.25 kg)	3.0 pounds (1.36 kg)	3.1 pounds (1.41 kg)	3.3 pounds (1.50 kg)	3.5 pounds (1.59 kg)
SHAFT SIDE LOAD**		170 lbs. (77.0 kg)	130 lbs. (59.0 kg)	110 lbs. (50.0 kg)	70 lbs. (31.7 kg)	30 lbs. (13.5 kg)

* THEORETICAL

** SIDE LOAD: Maximum Permissible Shaft Side Load at 2500 RPM and 1000 PSI (69.0 bar) (B-10 Bearing Life of 1000 Hrs.)

⚠WARNING
Never exceed the INTERMITTENT pressure rating or 5000 RPM

OIL TEMPERATURE: Maximum recommended oil temperature 180° F (82.2° C)

OIL VISCOSITY: Recommended viscosity 150 SUS (3.55 engler) (32 centistokes) Minimum recommended viscosity 60 SUS (2.1 engler) (13 centistokes)

FILTRATION: Minimum recommended filtration 10 Micron.

END THRUST: 80 LBS. (36.9 kg.) maximum.

DYNAMIC
FLUID COMPONENTS, INC.

Pressure Compensating Variable
Flow Control

Model DFC-51 is a full-range pressure compensating variable flow control. It is designed so that the orifice area varies as the lever is rotated. The outlet flow is smooth and constant regardless of the pressure on the control flow or excess flow ports. An adjustable ball spring relief allows for pressure compensated flow up to the pressure setting on the relief. Relief valves are preset at 1500 psi and field adjustable from 75 to 3000 psi.

Materials

- Cast Iron Body
- Heat Treated Compensator Spool
- Stainless Steel Rotary Spool
- Buna-N "O" Rings

Installation Data

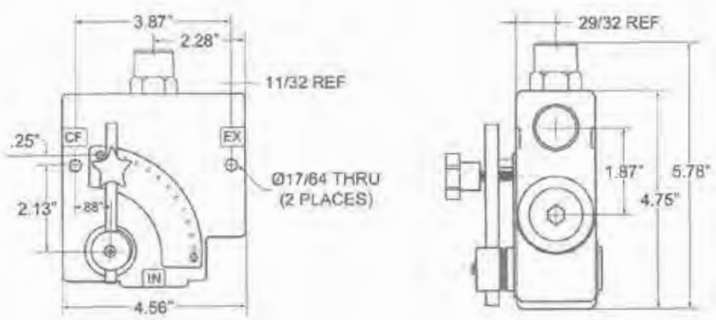

DYNAMIC
FLUID COMPONENTS, INC.

Hydraulic Motor
Model BMSY

The BMSY series motor adapts the advanced **ROLORTORC™** gear set design with **DISC** distribution flow and high pressure. These motors can be supplied with various options for multifunctional operations in accordance with the application requirements. The output shaft tapered roller bearings permit high axial and radial forces offering a smooth operation during low pressure start up and high pressure operation.

These low weight advanced construction design motors are manufactured in accordance with the requirements of the ISO 9000-2000 quality system.

**** Check out our new higher pressure BMSY shaft seals - *see page 79.* ****

Technical Specifications

MODEL		BMSY 80	BMSY 100	BMSY 125	BMSY 160	BMSY 200	BMSY 250	BMSY 315	BMSY 400	BMSY 475
Displacement *in³/rev (cm³/rev)*		4.92 (81)	6.15 (101)	7.63 (125)	9.39 (154)	11.83 (194)	14.83 (243)	18.97 (311)	24.04 (394)	28.98 (475)
Max Speed *rpm*	Cont	800	748	600	470	375	300	240	185	155
	Int.	988	900	720	560	450	360	280	225	185
Max Torque *in-lbf*	Cont	1991	2566	3230	4292	5185	6265	7787	7786	8053
	Int.	2212	2832	3540	4778	5707	7142	8495	8495	8495
Max Differential *psi*	Cont	2973	2973	2973	3045	3045	2900	2900	2320	2030
	Int.	3265	3265	3265	3265	3265	3265	3265	2563	2175
Max Flow *gpm*	Cont	17.1	19.81	19.81	19.81	19.81	19.81	19.81	19.81	19.81
	Int.	21.13	23.77	23.77	23.77	23.77	23.77	23.77	23.77	23.77
Weight		23.70 lbs	24.05 lbs	24.75 lbs	25.00 lbs	26.15 lbs	27.35 lbs	28.95 lbs	30.95 lbs	32.80 lbs

Continuous = maximum of continuous operation. Intermittent = maximum operating range for 6 seconds per minute

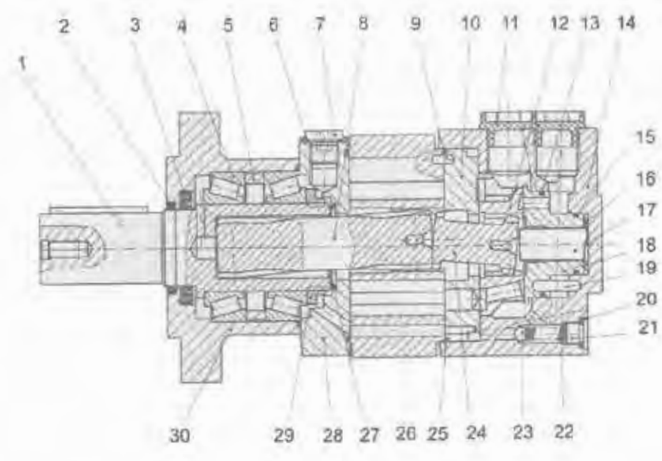

Diagram Key

1 Output Shaft
2 Dust Seal
3 Shaft Seal
4 Roller Bearing
5 Bearing Spacer
6 Seal Washer
7 Case Drain Plug
8 Drive Link
9 Pin
10 Timing Plate
11 Shipping Plug
12 Distributor Plate
13 "O" Ring
14 Rear Housing
15 "O" Ring
16 Balancer Spring
17 Spacer
18 Balance Plate
19 Pin
20 Seal Washer
21 Check Valve Plug
22 Check Valve Spring
23 Ball Check (steel)
24 Distributor Drive Link
25 Body "O" Ring
26 Rolortorc™ Set
27 Oil Control Ring
28 Drain Manifold
29 Bearing Nut
30 Shaft Housing

Cross Sectional View

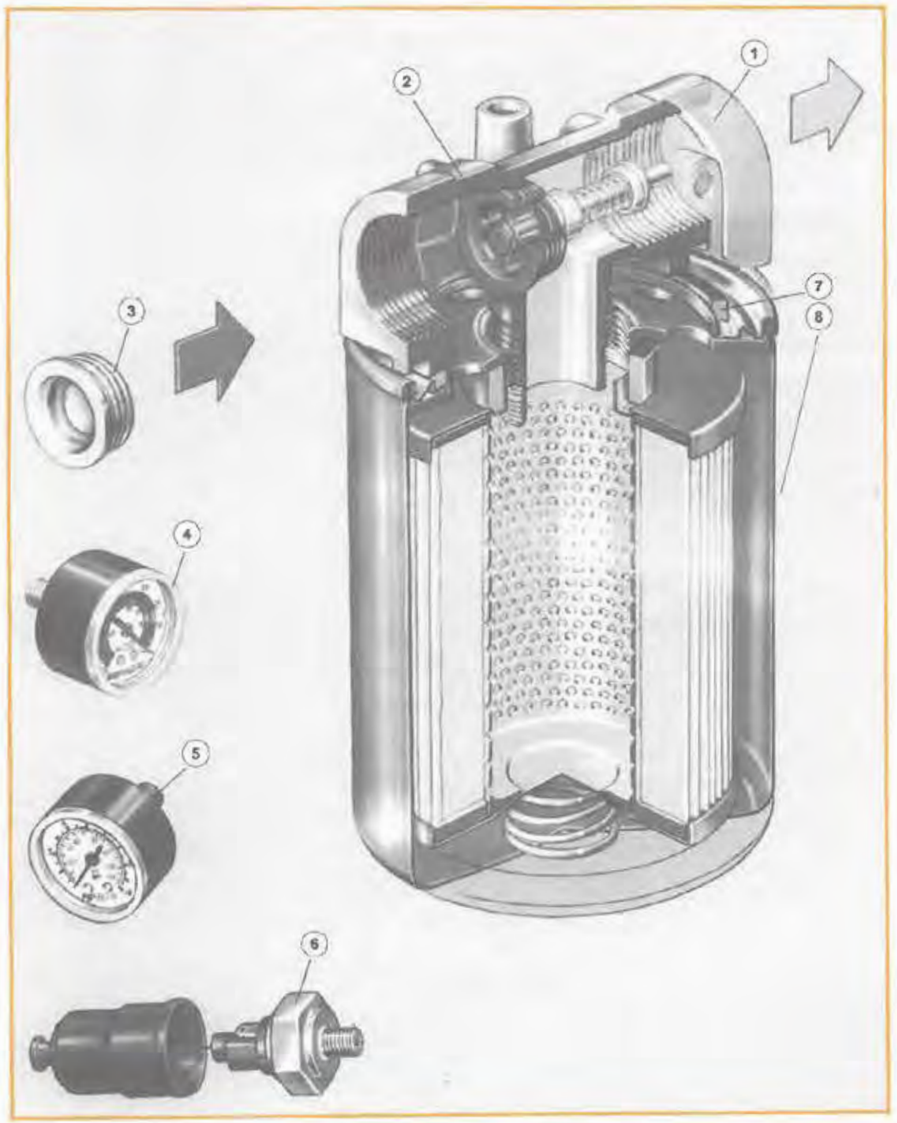

1 HEAD
2 BYPASS VALVE
3 NO BYPASS PLUG
4 VISUAL INDICATOR (VACUUM-VS)
5 VISUAL INDICATOR (PRESSURE-VR)
6 ELECTRICAL INDICATOR
7 ELEMENT SEAL
8 ELEMENT

36E Series

Model PRE - Pressure Reducing Valve

SUBMITTAL SHEET

"Apollo" Valves

Job Name:	
Job Location:	
Engineer:	
Contractor:	
Tag:	
PO#:	
Rep:	
Wholesale Dist.:	

DESCRIPTION

The **Apollo® Model PRE (36E Series) Pressure Reducing Valve** is designed to conserve water and protect water distribution systems by automatically reducing elevated supply pressures. Ideal for industrial and irrigation applications. The dezincification resistant bronze body and dielectric polymer cage provide maximum corrosion resistance. Designed for easy in-line servicing with simple cartridge removal.

FEATURES

- Balanced Piston Design
- SS Adjusting Screw & Nut
- Sealed Cage for Vault Installations
- Built-in Thermal Expansion Bypass
- Large Area Integral Stainless Steel Strainer
- Modular Seat Disc and Strainer Cartridge
- Control Pressure Ranges: 15-75 psi and 75-150 psi
- High Flow / High Efficiency Design
- NPT & Solder Connections
- Factory Tested and Preset at 60 psi
- Single Union, Double Union and Less Union Configurations Available
- **100% Manufactured in USA - ARRA Compliant**

PERFORMANCE RATING

- Maximum Supply Pressure: 400 psig
- Working Temperature Range: 33°F - 180°F

APPROVALS

- ASSE 1003
- IAPMO/UPC
- CSA B356

OPTIONS

- (-B) - Bronze Cap
- (-P) - Tapped w/ Plug
- (-G) - Tapped w/ Gauge
- (-03) - High Pressure 75-150 psi
- (36ELF) - Certified Lead Free

STANDARD MATERIALS LIST

BODY	Bronze, ASTM B584
UNION NUT	Brass, ASTM B16
TAILPIECE	Brass, ASTM B16
SCREEN	Stainless Steel
CAP	Noryl™
DIAPHRAGM	NSF Grade EPDM
SEAT DISC	NSF Grade EPDM
ADJUSTING SCREW/NUT	Stainless Steel
SPRING	Spring Steel, ASTM 228
O-RINGS	NSF Grade EPDM

DIMENSIONS

Connect Type	Size (in.)	Dimensions (in.)						Single Union Wt.	Double Union Wt.
		A	B	C	D	E	F		
THREAD	1/2"	3-5/8	4-1/2	5-3/8	6	5/8	2-3/4	2.4	2.75
SOLDER	1/2"	3-5/8	4-1/2	5-1/2	6	1/2	2-3/4	2.4	2.75
PEX	1/2"	3-5/8	4-1/2	5-1/2	6	5/8	2-3/4	2.4	2.75
CPVC	1/2"	3-5/8	4-1/4	5	6	1/2	2-3/4	2.4	2.75
THREAD	3/4"	3-5/8	4-1/2	5-1/2	6	5/8	2-3/4	2.4	2.75
SOLDER	3/4"	3-5/8	4-1/2	5-1/2	6	3/4	2-3/4	2.4	2.75
PEX	3/4"	3-5/8	4-5/8	5-5/8	6	5/8	2-3/4	2.4	2.75
CPVC	3/4"	3-5/8	4-1/2	5-1/2	6	5/8	2-3/4	2.4	2.75
THREAD	1"	3-5/8	4-5/8	5-3/4	6	5/8	3-3/8	2.4	2.86
SOLDER	1"	3-5/8	4-5/8	5-3/4	6	7/8	3-3/8	2.4	2.86
PEX	1"	3-5/8	4-3/4	6	6	3/4	3-3/8	2.4	2.86
CPVC	1"	3-5/8	4-3/4	6	6	15/16	3-3/8	2.4	2.86

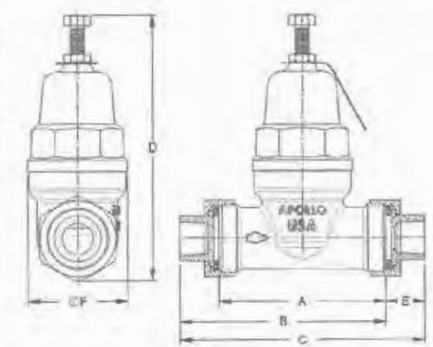

Customer Service (704) 841-6000
www.apollovalves.com

AALBERTS INDUSTRIES

36E Series

Model PRE - Pressure Reducing Valve

SUBMITTAL SHEET

"Apollo" Valves

FLOW CAPACITY

Pipe Size	Fall-Off (PSI)	Pressure Differential (PSI)		
		25	50	75
		GPM		
1/2"	10	10	13	16
	15	13	18	22
	20	17	23	29
	30	22	29	36
3/4"	10	16	21	26
	15	20	27	32
	20	24	32	40
	30	29	38	48
1"	10	14	31	37
	15	22	37	42
	20	28	41	46
	30	36	43	50

Note: Flow curves are based on static conditions of 100psi inlet pressure and 50 psi outlet pressure.
Pressure differential is the difference between the supply pressure and adjusted outlet pressure measured in the static (closed) condition.
Pressure fall-off is the decrease in downstream regulated pressure as the flow increases.

PART NUMBER MATRIX

36ELF 36E	1	X	X	X	X	X
SERIES	STYLE	UNION	SIZE	PRESSURE	CONNECTION	OPTION
36ELF 36E (non potable)	1	0 - No Union (NPT) 1 - Single Union 2 - Double Union	3 - 1/2" 4 - 3/4" 5 - 1"	01 - 15-75 psig 03 - 75-150 psig	T - FNPT Thread S - Solder C - CPVC P - Push X - PEX PR - Press	B - Bronze Cap

AALBERTS INDUSTRIES

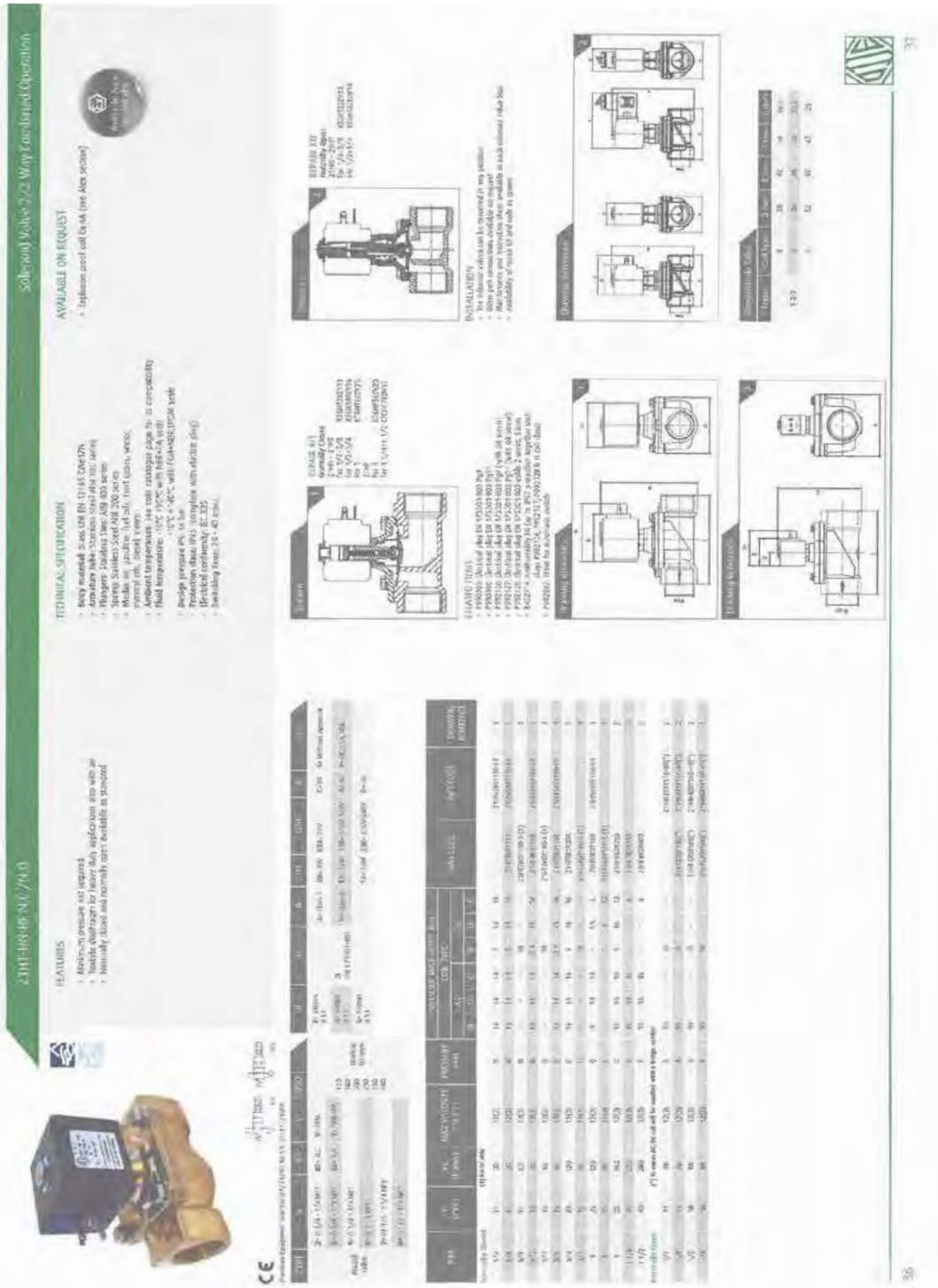

LEGEND VALVE

www.legendvalve.com
1-800-752-2082

SUBMITTAL SHEET

JOB NAME: ITEM TAG:

JOB LOCATION: PART NUMBER:

CONTRACTOR: DATE:

ENGINEER APPROVAL: DATE:

BRONZE Y-STRAINER

T/S-15

Full-pattern heavy-duty bronze body

Threaded or Sweat Ends

Equipped with 304 SS 20-mesh screen or 1/16" hole diameter perforated strainer

Square-head Closure Plug Furnished

Ideal for protecting downstream components, by trapping and holding debris.

- Bronze material complies with ASTM B584 specifications
- Female threaded ends comply with ANSI/ASME B1.20.1
- Solder cup ends comply with ANSI/ASME B16.18

Working Pressure, Non-Shock (PSI)
Saturated Steam: 150

Cold Water, Oil, Gas: 300

Screen and Strainer Type
20-Mesh screen 1/4" - 2"

1/16" Perf. Strainer 2-1/2" & 3"

Replacement 20-Mesh or optional 40 or 80 Mesh screens available

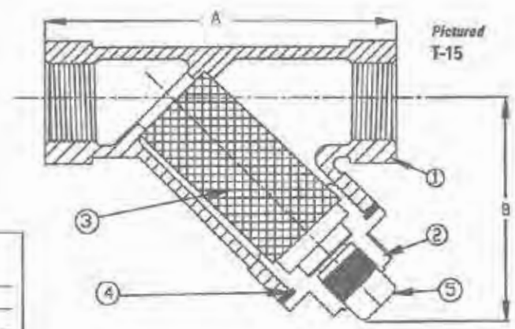

Pictured
T-15

MATERIAL SPECIFICATION

PART	MATERIAL	SPECIFICATION
1 Body	Bronze	ASTM B584 UNS C84400
2 Cap	Bronze	ASTM B584 UNS C84400
3 Screen or Strainer	Stainless Steel	ASTM A240 UNS S30400 (304)
4 Cap gasket	Nitrile bonded non-asbestos fiber	Commercial grade
5 Closure (blowoff) plug	Bronze	ASTM B584 UNS C83600

DIMENSIONS

Size	A (IPS)	B (IPS)	Plug NPT	A (CxC)	B (CxC)	Plug NPT
1/4"	3.21	2.17	3/8"			
3/8"	3.21	2.17	3/8"			
1/2"	3.21	2.17	3/8"	3.35	2.21	3/8"
3/4"	3.96	2.78	3/8"	4.32	2.88	3/8"
1"	4.53	2.95	1/2"	5.04	3.19	1/2"
1-1/4"	5.34	3.54	1/2"	5.91	3.70	1/2"
1-1/2"	6.22	3.95	1/2"	6.89	4.13	1/2"
2"	7.50	5.43	1/2"	8.52	5.12	1/2"
2-1/2"	9.06	5.91	1/2"	9.06	5.91	1/2"
3"	10.20	6.30	1/2"	10.20	6.30	1/2"

120T

Class 125, PTFE Seat, NPT Globe Valve

SUBMITTAL SHEET

"Apollo" Flow Controls

Job Name:	Quikrete
Job Location:	
Engineer:	
Contractor:	
Tag:	PTEHD2W101
PO#:	
Rep:	
Wholesale Dist.:	

DESCRIPTION

The **Apollo® Model 120T (33 Series) Globe Valve** provides a cost effective "Made in the USA" alternative to globally sourced multi-turn valves. These valves are cast, machined, assembled, and tested in South Carolina. The Apollo Globe valve can reliably be installed in most plumbing and heating systems (or building service piping).

FEATURES

- Optimum Flow Capacity
- Adjustable Graphite Stem Packing
- Dezincification Resistant
- 100% Factory tested
- NPT Connection
- Screw-in Bonnet
- Malleable Iron Rugged Hand Wheel
- Back seat protection
- **100% Machined and Assembled in USA**
- **ARRA Compliant**

PERFORMANCE RATING

- Saturated Steam: 125 psi (8.6 Bar) to 353°F(178°C)
- Cold Working Pressure: 200 psi (13.8 Bar) at 100°F
- Temperature Range: -20°F to 406°F

APPROVALS

- MSS SP-80, "Bronze Gate, Globe, Angle & Check Valves"
- ASME B1.20.1, "Pipe Threads, General Purpose (Inch)"
- MSS SP-104, "Wrought Copper Solder Joint Pressure Fittings"

STANDARD MATERIALS LIST

Body	ASTM B62 Bronze
Bonnet	ASTM B62 Bronze
Stem	ASTM B21 UNS C46400
Disc	PTFE
Packing	Grafoil®
Hand Wheel	Malleable Iron
Nameplate	Aluminum

DIMENSIONS

MODEL NO.	PART NO.	SIZE (IN.)	HEIGHT OPEN (IN.)	LENGTH (IN.)	WEIGHT (LB.)	CV (GPM)
120T38	33-132-01	3/8"	3.37	2.39	1.0	2.6
120T12	33-133-01	1/2"	3.47	2.70	1.1	4.4
120T34	33-134-01	3/4"	4.75	3.20	1.9	7.4
120T1	33-135-01	1"	5.40	3.75	3.0	12.1
120T114	33-136-01	1-1/4"	7.78	4.74	7.3	29.0
120T112	33-137-01	1-1/2"	7.78	4.74	7.0	30.0
120T2	33-138-01	2"	8.43	5.72	10.7	49.0

Customer Service (704) 841-6000
www.apolloflowcontrols.com

AALBERTS INDUSTRIES

120T

Class 125, PTFE Seat NPT Globe Valve

SUBMITTAL SHEET

"Apollo" Flow Controls

Job Name:	Quikrete
Job Location:	
Engineer:	
Contractor:	
Tag:	PTEHD2W100
PO#:	
Rep:	
Wholesale Dist.:	

DESCRIPTION

The **Apollo® Model 120T (33 Series) Globe Valve** provides a cost effective "Made in the USA" alternative to globally sourced multi-turn valves. These valves are cast, machined, assembled, and tested in South Carolina. The Apollo Globe valve can reliably be installed in most plumbing and heating systems (or building service piping).

FEATURES

- Optimum Flow Capacity
- Adjustable Graphite Stem Packing
- Dezincification Resistant
- 100% Factory tested
- NPT Connection
- Screw-in Bonnet
- Malleable Iron Rugged Hand Wheel
- Back seat protection
- **100% Machined and Assembled in USA**
- **ARRA Compliant**

PERFORMANCE RATING

- Saturated Steam: 125 psi (8.6 Bar) to 353°F(178°C)
- Cold Working Pressure: 200 psi (13.8 Bar) at 100°F
- Temperature Range: -20°F to 406°F

APPROVALS

- MSS SP-80, "Bronze Gate, Globe, Angle & Check Valves"
- ASME B1.20.1, "Pipe Threads, General Purpose (Inch)"
- MSS SP-104, "Wrought Copper Solder Joint Pressure Fittings"

STANDARD MATERIALS LIST

Body	ASTM B62 Bronze
Bonnet	ASTM B62 Bronze
Stem	ASTM B21 UNS C46400
Disc	PTFE
Packing	Grafoil®
Hand Wheel	Malleable Iron
Nameplate	Aluminum

DIMENSIONS

MODEL NO.	PART NO.	SIZE (IN.)	HEIGHT OPEN (IN.)	LENGTH (IN.)	WEIGHT (LB.)	CV (GPM)
120T38	33-132-01	3/8"	3.37	2.39	1.0	2.6
120T12	33-133-01	1/2"	3.47	2.70	1.1	4.4
120T34	33-134-01	3/4"	4.75	3.20	1.9	7.4
120T1	33-135-01	1"	5.40	3.75	3.0	12.1
120T114	33-136-01	1-1/4"	7.78	4.74	7.3	29.0
120T112	33-137-01	1-1/2"	7.78	4.74	7.0	30.0
120T2	33-138-01	2"	8.43	5.72	10.7	49.0

Customer Service (704) 841-6000
www.apolloflowcontrols.com

AALBERTS INDUSTRIES

INTRODUCTION

Thank you for purchasing a Honda engine. We want to help you to get the best results from your new engine and to operate it safely. This manual contains information on how to do that; please read it carefully before operating the engine. If a problem should arise, or if you have any questions about your engine, consult an authorized Honda servicing dealer.

All information in this publication is based on the latest product information available at the time of printing. Honda Motor Co., Ltd. reserves the right to make changes at any time without notice and without incurring any obligation. No part of this publication may be reproduced without written permission.

This manual should be considered a permanent part of the engine and should remain with the engine if resold.

Review the instructions provided with the equipment powered by this engine for any additional information regarding engine startup, shutdown, operation, adjustments or any special maintenance instructions.

United States, Puerto Rico, and U.S. Virgin Islands:
We suggest you read the warranty policy to fully understand its coverage and your responsibilities of ownership. The warranty policy is a separate document that should have been given to you by your dealer.

SAFETY MESSAGES

Your safety and the safety of others are very important. We have provided important safety messages in this manual and on the engine. Please read these messages carefully.

A safety message alerts you to potential hazards that could hurt you or others. Each safety message is preceded by a safety alert symbol ⚠ and one of three words, DANGER, WARNING, or CAUTION.

These signal words mean:

⚠ DANGER You WILL be KILLED or SERIOUSLY HURT if you don't follow instructions.

⚠ WARNING You CAN be KILLED or SERIOUSLY HURT if you don't follow instructions.

⚠ CAUTION You CAN be HURT if you don't follow instructions.

Each message tells you what the hazard is, what can happen, and what you can do to avoid or reduce injury.

DAMAGE PREVENTION MESSAGES

You will also see other important messages that are preceded by the word NOTICE.

This word means:

NOTICE Your engine or other property can be damaged if you don't follow instructions.

The purpose of these messages is to help prevent damage to your engine, other property, or the environment.

GX240-270-340-390UT2/RT2

37Z8R603
00X37-Z8R-6030

HONDA

OWNER'S MANUAL
MANUEL DE L'UTILISATEUR
MANUAL DEL PROPIETARIO

ENGLISH

FRANÇAIS

ESPAÑOL

GX240 · GX270 · GX340 · GX390

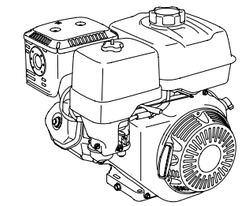

⚠ WARNING: ⚠

The engine exhaust from this product contains chemicals known to the State of California to cause cancer, birth defects or other reproductive harm.

CONTENTS

SAFETY INFORMATION

- Understand the operation of all controls and learn how to stop the engine quickly in case of emergency. Make sure the operator receives adequate instruction before operating the equipment.
- Do not allow children to operate the engine. Keep children and pets away from the area of operation.
- Your engine's exhaust contains poisonous carbon monoxide. Do not run the engine without adequate ventilation, and never run the engine indoors.
- The engine and exhaust become very hot during operation. Keep the engine at least 1 meter (3 feet) away from buildings and other equipment during operation. Keep flammable materials away, and do not place anything on the engine while it is running.

SAFETY LABEL LOCATION

This label warns you of potential hazards that can cause serious injury. Read it carefully.
If the label comes off or becomes hard to read, contact your Honda servicing dealer for replacement.

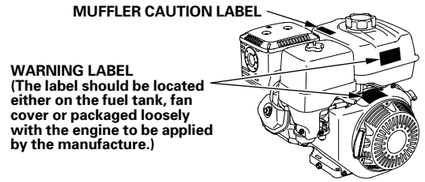

WARNING LABEL	For EU	Except EU
	attached to product	supplied with product
⚠ WARNING Gasoline is highly flammable and explosive. Turn engine off and let cool before refueling. The engine emits toxic carbon monoxide. Do not run in an enclosed area. Read Owner's Manual before operation.	supplied with product	attached to product
⚠ ATTENTION L'essence est très inflammable et explosive. Arrêter le moteur et le laisser refroidir avant de faire le plein d'essence. Le moteur produit les vapeurs nocives de monoxyde de carbone. Ne pas utiliser dans un local endos. Lire le manuel de propriétaire avant l'utilisation.	supplied with product	supplied with product

MUFFLER CAUTION LABEL	For EU	Except EU
	not included	supplied with product
⚠ CAUTION HOT MUFFLER CAN BURN YOU. Stay away If engine has been running.	supplied with product	attached to product
⚠ ATTENTION L'ECHAPPEMENT CHAUD PEUT VOUS BRULER. S'ELOIGNER QUAND LE MOTEUR FONCTIONNE.	supplied with product	supplied with product


Gasoline is highly flammable and explosive.
Stop the engine and let cool before refueling.


The engine emits toxic poisonous carbon monoxide gas. Do not run in an enclosed area.


Read Owner's Manual before operation.


Hot muffler can burn you.
Stay away if engine has been running.

COMPONENT & CONTROL LOCATIONS

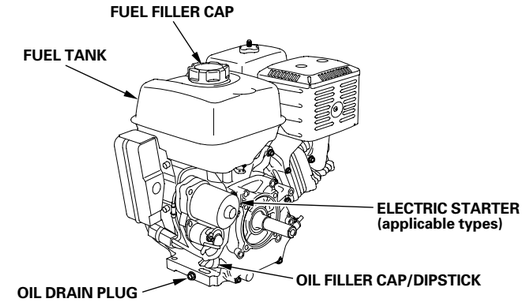

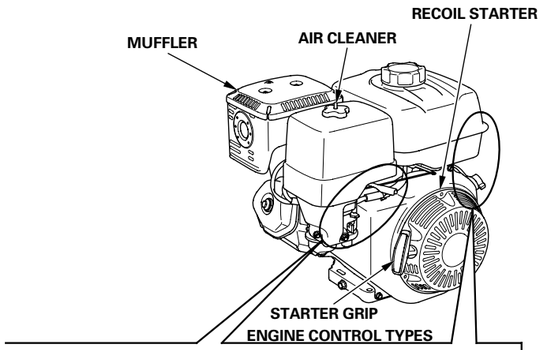

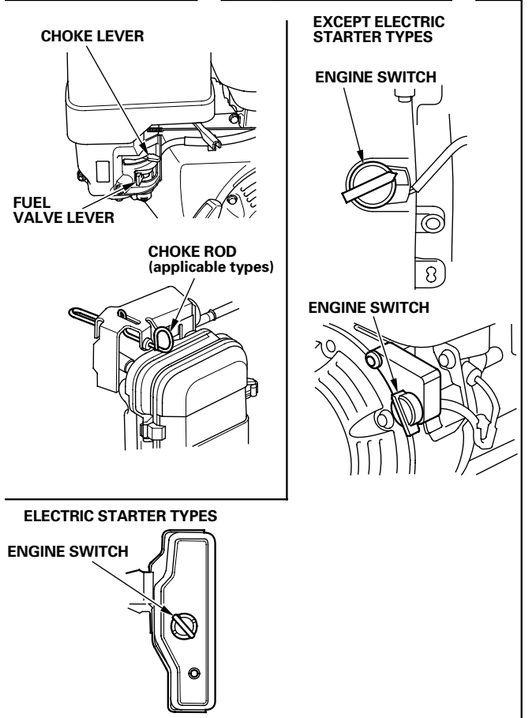

FEATURES

OIL ALERT® SYSTEM (applicable types)
''Oil Alert is a registered trademark in the United States''

The Oil Alert system is designed to prevent engine damage caused by an insufficient amount of oil in the crankcase. Before the oil level in the crankcase can fall below a safe limit, the Oil Alert system will automatically stop the engine (the engine switch will remain in the ON position).

If the engine stops and will not restart, check the engine oil level (see page 9) before troubleshooting in other areas.

CIRCUIT PROTECTOR (applicable types)
The circuit protector protects the battery charging circuit. A short circuit, or a battery connected with reverse polarity, will trip the circuit protector.

The green indicator inside the circuit protector will pop out to show that the circuit protector has switched off. If this occurs, determine the cause of the problem, and correct it before resetting the circuit protector.

Push the circuit protector button to reset.

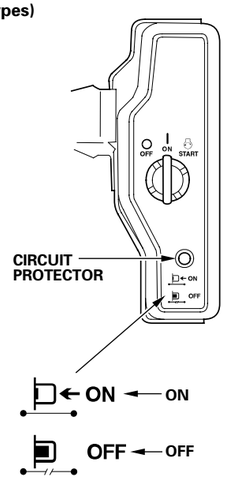

BEFORE OPERATION CHECKS

IS YOUR ENGINE READY TO GO?

For your safety, to ensure compliance with environmental regulations, and to maximize the service life of your equipment, it is very important to take a few moments before you operate the engine to check its condition. Be sure to take care of any problem you find, or have your servicing dealer correct it, before you operate the engine.

> **⚠ WARNING**
>
> Improperly maintaining this engine, or failure to correct a problem before operation, can cause a malfunction in which you can be seriously hurt or killed.
>
> Always perform a pre-operation inspection before each operation, and correct any problem.

Before beginning your pre-operation checks, be sure the engine is level and the engine switch is in the OFF position.

Always check the following items before you start the engine:

Check the General Condition of the Engine

1. Look around and underneath the engine for signs of oil or gasoline leaks.
2. Remove any excessive dirt or debris, especially around the muffler and recoil starter.
3. Look for signs of damage.
4. Check that all shields and covers are in place, and all nuts, bolts, and screws are tightened.

Check the Engine

1. Check the fuel level (see page 8). Starting with a full tank will help to eliminate or reduce operating interruptions for refueling.
2. Check the engine oil level (see page 9). Running the engine with a low oil level can cause engine damage.

   The Oil Alert system (applicable types) will automatically stop the engine before the oil level falls below safe limits. However, to avoid the inconvenience of an unexpected shutdown, always check the engine oil level before startup.
3. Check the reduction case oil level on applicable types (see page 9). Oil is essential to reduction case operation and long life.
4. Check the air filter element (see page 10). A dirty air filter element will restrict air flow to the carburetor, reducing engine performance.
5. Check the equipment powered by this engine.

   Review the instructions provided with the equipment powered by this engine for any precautions and procedures that should be followed before engine startup.

OPERATION

SAFE OPERATING PRECAUTIONS

Before operating the engine for the first time, please review the *SAFETY INFORMATION* section on page 2 and the *BEFORE OPERATION CHECKS* on page 4 .

For your safety, do not operate the engine in an enclosed area such as a garage. Your engine's exhaust contains poisonous carbon monoxide gas that can collect rapidly in an enclosed area and cause illness or death.

> **⚠ WARNING**
>
> Exhaust contains poisonous carbon monoxide gas that can build up to dangerous levels in closed areas. Breathing carbon monoxide can cause unconsciousness or death.
>
> Never run the engine in a closed, or even partly closed area where people may be present.

Review the instructions provided with the equipment powered by this engine for any safety precautions that should be observed with engine startup, shutdown or operation.

STARTING THE ENGINE

1. Move the fuel valve lever to the ON position.

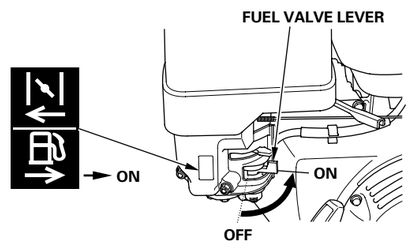

2. To start a cold engine, move the choke lever or choke rod (applicable types) to the CLOSED position.

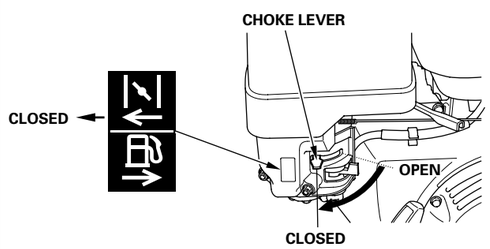

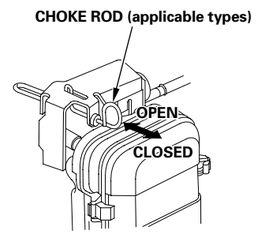

To restart a warm engine, leave the choke lever or choke rod in the OPEN position.

Some engine applications use a remote-mounted choke control rather than the engine-mounted choke lever shown on the previous page. Refer to the instructions provided by the equipment manufacturer.

3. Move the throttle lever away from the MIN. position, about 1/3 of the way toward the MAX. position.

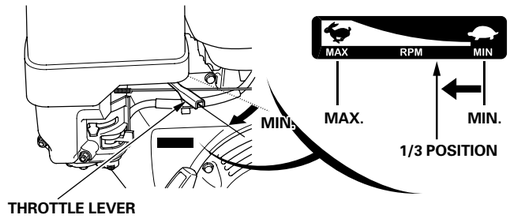

Some engine applications use a remote-mounted throttle control rather than the engine-mounted throttle lever shown here. Refer to the instructions provided by the equipment manufacturer.

4. Turn the engine switch to the ON position.

EXCEPT ELECTRIC STARTER TYPES

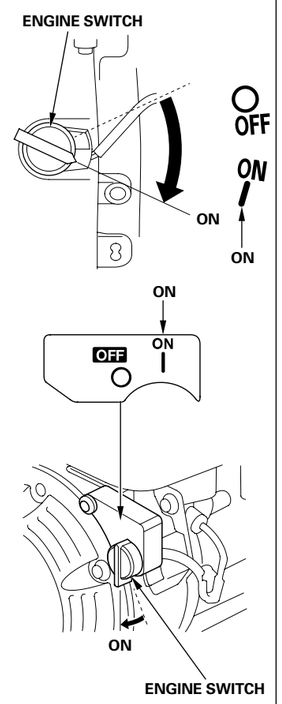

ELECTRIC STARTER TYPES

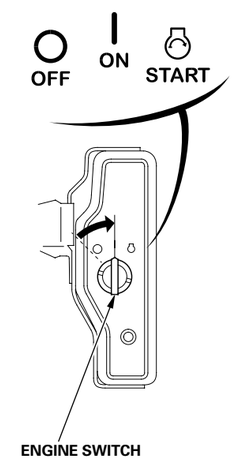

5. Operate the starter.

RECOIL STARTER

Pull the starter grip lightly until you feel resistance, then pull briskly in the direction of the arrow as shown below. Return the starter grip gently.

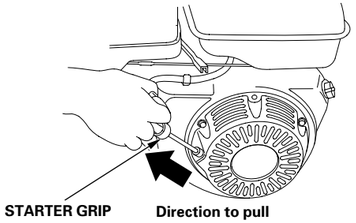

NOTICE

Do not allow the starter grip to snap back against the engine. Return it gently to prevent damage to the starter.

ELECTRIC STARTER (applicable types):

Turn the key to the START position, and hold it there until the engine starts.

If the engine fails to start within 5 seconds, release the key, and wait at least 10 seconds before operating the starter again.

NOTICE

Using the electric starter for more than 5 seconds at a time will overheat the starter motor and can damage it.

When the engine starts, release the key, allowing it to return to the ON position.

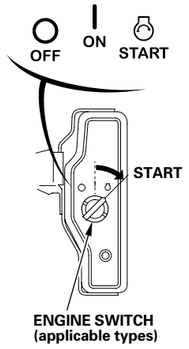

6. If the choke lever or choke rod (applicable types) was moved to the CLOSED position to start the engine, gradually move it to the OPEN position as the engine warms up.

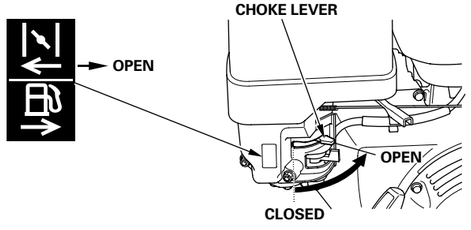

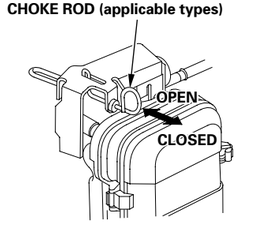

STOPPING THE ENGINE

To stop the engine in an emergency, simply turn the engine switch to the OFF position. Under normal conditions, use the following procedure. Refer to the instructions provided by the equipment manufacturer.

1. Move the throttle lever to the MIN. position.

   Some engine applications use a remote-mounted throttle control rather than the engine-mounted throttle lever shown here.

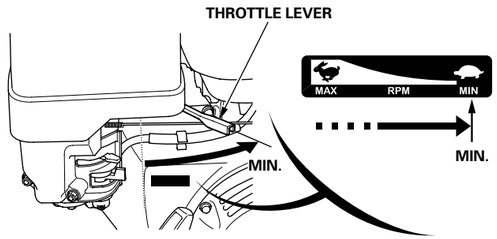

2. Turn the engine switch to the OFF position.

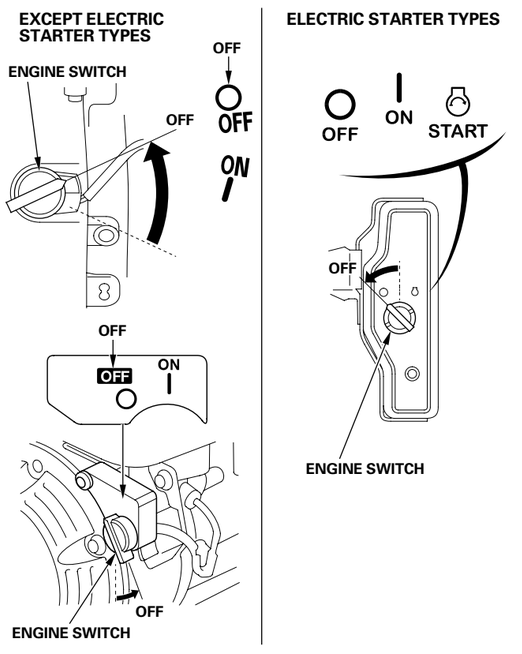

3. Turn the fuel valve lever to the OFF position.

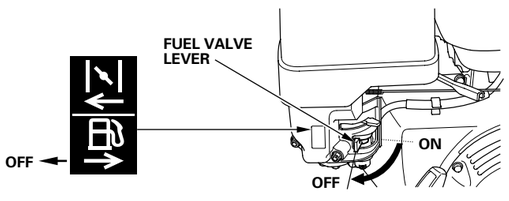

SETTING ENGINE SPEED

Position the throttle lever for the desired engine speed.

Some engine applications use a remote-mounted throttle control rather than the engine-mounted throttle lever shown here. Refer to the instructions provided by the equipment manufacturer.

For engine speed recommendations, refer to the instructions provided with the equipment powered by this engine.

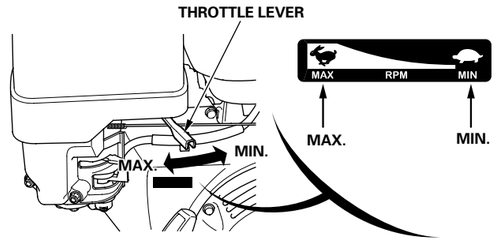

SERVICING YOUR ENGINE

THE IMPORTANCE OF MAINTENANCE

Good maintenance is essential for safe, economical, and trouble-free operation. It will also help reduce pollution.

> **⚠ WARNING**
>
> Improper maintenance, or failure to correct a problem before operation, can cause a malfunction in which you can be seriously hurt or killed.
>
> Always follow the inspection and maintenance recommendations and schedules in this owner's manual.

To help you properly care for your engine, the following pages include a maintenance schedule, routine inspection procedures, and simple maintenance procedures using basic hand tools. Other service tasks that are more difficult, or require special tools, are best handled by professionals and are normally performed by a Honda technician or other qualified mechanic.
The maintenance schedule applies to normal operating conditions. If you operate your engine under severe conditions, such as sustained high-load or high-temperature operation, or use in unusually wet or dusty conditions, consult your Honda servicing dealer for recommendations applicable to your individual needs and use.
Maintenance, replacement, or repair of the emission control devices and systems may be performed by any engine repair establishment or individual, using parts that are "certified" to EPA standards.

MAINTENANCE SAFETY

Some of the most important safety precautions follow. However, we cannot warn you of every conceivable hazard that can arise in performing maintenance. Only you can decide whether or not you should perform a given task.

> **⚠ WARNING**
>
> Failure to properly follow maintenance instructions and precautions can cause you to be seriously hurt or killed.
>
> Always follow the procedures and precautions in this owner's manual.

SAFETY PRECAUTIONS

- Make sure the engine is off before you begin any maintenance or repairs. To prevent accidental startup, disconnect the spark plug cap. This will eliminate several potential hazards:
  - **Carbon monoxide poisoning from engine exhaust.** Operate outside, away from open windows or doors.
  - **Burns from hot parts.** Let the engine and exhaust system cool before touching.
  - **Injury from moving parts.** Do not run the engine unless instructed to do so.
- Read the instructions before you begin, and make sure you have the tools and skills required.
- To reduce the possibility of fire or explosion, be careful when working around gasoline. Use only a non-flammable solvent, not gasoline, to clean parts. Keep cigarettes, sparks and flames away from all fuel related parts.

Remember that an authorized Honda servicing dealer knows your engine best and is fully equipped to maintain and repair it.
To ensure the best quality and reliability, use only new Honda Genuine parts or their equivalents for repair and replacement.

MAINTENANCE SCHEDULE

REGULAR SERVICE PERIOD (3) Perform at every indicated month or operating hour interval, whichever comes first. ITEM		Each Use	First Month or 20 Hrs	Every 3 Months or 50 Hrs	Every 6 Months or 100 Hrs	Every Year or 300 Hrs	Refer to Page
Engine oil	Check level	○					9
	Change		○		○		9
Reduction case oil (applicable types)	Check level	○					9
	Change		○		○		10
Air cleaner	Check	○					10
	Clean			○ (1)	○ ∗ (1)		10 – 11
	Replace					○ ∗∗	
Sediment cup	Clean				○		12
Spark plug	Check-adjust				○		12
	Replace					○	
Spark arrester (applicable types)	Clean				○ (4)		13
Idle speed	Check-adjust					○ (2)	13
Valve clearance	Check-adjust					○ (2)	Shop manual
Combustion chamber	Clean	After every 1000 Hrs. (2)					Shop manual
Fuel tank & filter	Clean				○ (2)		Shop manual
Fuel tube	Check	Every 2 years (Replace if necessary) (2)					Shop manual

∗ • Internal vent carburetor with dual element type only.
• Cyclone type every 6 months or 150 hours.

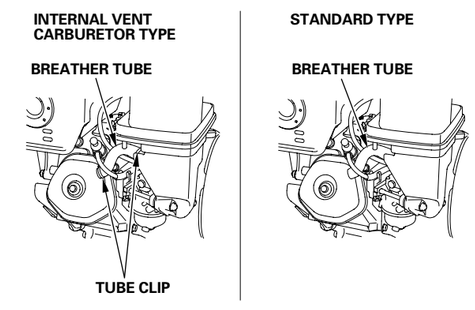

∗∗ • Replace paper element type only.
• Cyclone type every 2 years or 600 hours.

(1) Service more frequently when used in dusty areas.

(2) These items should be serviced by your servicing dealer, unless you have the proper tools and are mechanically proficient. Refer to the Honda shop manual for service procedures.

(3) For commercial use, log hours of operation to determine proper maintenance intervals.

(4) In Europe and other countries where the machinery directive 2006/42/EC is enforced, this cleaning should be done by your servicing dealer.

Failure to follow this maintenance schedule could result in non-warrantable failures.

REFUELING

Recommended Fuel

Unleaded gasoline		
	U.S.	Pump octane rating 86 or higher
	Except U.S.	Research octane rating 91 or higher
		Pump octane rating 86 or higher

This engine is certified to operate on unleaded gasoline with a pump octane rating of 86 or higher (a research octane rating of 91 or higher).
Refuel in a well ventilated area with the engine stopped. If the engine has been running, allow it to cool first. Never refuel the engine inside a building where gasoline fumes may reach flames or sparks.
You may use unleaded gasoline containing no more than 10% ethanol (E10) or 5% methanol by volume. In addition, methanol must contain cosolvents and corrosion inhibitors. Use of fuels with content of ethanol or methanol greater than shown above may cause starting and/or performance problems. It may also damage metal, rubber, and plastic parts of the fuel system. Engine damage or performance problems that result from using a fuel with percentages of ethanol or methanol greater than shown above are not covered under the Warranty.

If your equipment will be used on an infrequent or intermittent basis, please refer to the fuel section of the STORING YOUR ENGINE chapter (see page 13) for additional information regarding fuel deterioration.

Never use stale or contaminated gasoline or an oil/gasoline mixture. Avoid getting dirt or water in the fuel tank.

⚠ WARNING

Gasoline is highly flammable and explosive, and you can be burned or seriously injured when refueling.

- Stop the engine and keep heat, sparks, and flame away.
- Refuel only outdoors.
- Wipe up spills immediately.

NOTICE

Fuel can damage paint and some types of plastic. Be careful not to spill fuel when filling your fuel tank. Damage caused by spilled fuel is not covered under the Distributor's Limited Warranty.

For refueling, refer to the manufacturer's instructions provided with the equipment. See the following for a Honda supplied standard fuel tank refueling instruction.

1. With the engine stopped and on a level surface, remove the fuel filler cap and check the fuel level. Refill the tank if the fuel level is low.

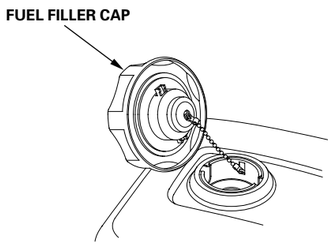

2. Add fuel to the bottom of the maximum fuel level limit of the fuel tank. Do not overfill. Wipe up spilled fuel before starting the engine.

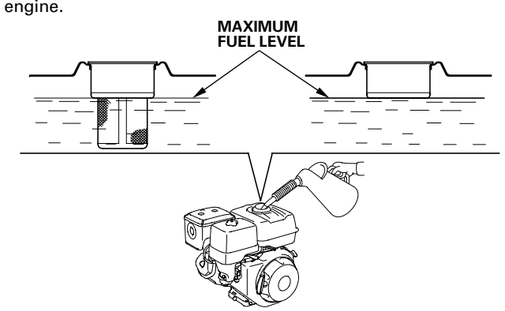

3. Refuel carefully to avoid spilling fuel. Do not fill the fuel tank completely. It may be necessary to lower the fuel level depending on operating conditions. After refueling, tighten the fuel filler cap securely.

Keep gasoline away from appliance pilot lights, barbecues, electric appliances, power tools, etc.

Spilled fuel is not only a fire hazard, it causes environmental damage. Wipe up spills immediately.

ENGINE OIL

Oil is a major factor affecting performance and service life.
Use 4-stroke automotive detergent oil.

Recommended Oil

Use 4-stroke motor oil that meets or exceeds the requirements for API service category SJ or later (or equivalent). Always check the API service label on the oil container to be sure it includes the letters SJ or later (or equivalent).

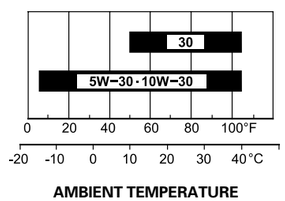

SAE 10W-30 is recommended for general use. Other viscosities shown in the chart may be used when the average temperature in your area is within the indicated range.

Oil Level Check

Check the engine oil level with the engine stopped and in a level position.

1. Remove the oil filler cap/dipstick and wipe it clean.

2. Insert the oil filler cap/dipstick into the oil filler neck as shown, but do not screw it in, then remove it to check the oil level.

3. If the oil level is near or below the lower limit mark on the dipstick, fill with the recommended oil (see page 8) to the upper limit mark (bottom edge of the oil fill hole). Do not overfill.

4. Reinstall the oil filler cap/dipstick.

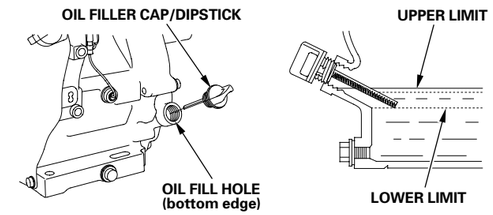

NOTICE

Running the engine with a low oil level can cause engine damage. This type of damage is not covered by the Distributor's Limited Warranty.

The Oil Alert system (applicable types) will automatically stop the engine before the oil level falls below the safe limit. However, to avoid the inconvenience of an unexpected shutdown, always check the engine oil level before startup.

Oil Change

Drain the used oil when the engine is warm. Warm oil drains quickly and completely.

1. Place a suitable container below the engine to catch the used oil, then remove the oil filler cap/dipstick, oil drain plug and washer.

2. Allow the used oil to drain completely, then reinstall the oil drain plug and a new washer, and tighten the oil drain plug securely.

   Please dispose of used motor oil in a manner that is compatible with the environment. We suggest you take used oil in a sealed container to your local recycling center or service station for reclamation. Do not throw it in the trash, pour it on the ground, or pour it down a drain.

3. With the engine in a level position, fill with the recommended oil (see page 8) to the upper limit mark (bottom edge of the oil fill hole) on the dipstick.

   NOTICE

   Running the engine with a low oil level can cause engine damage. This type of damage is not covered by the Distributor's Limited Warranty.

   The Oil Alert system (applicable types) will automatically stop the engine before the oil level falls below the safe limit. However, to avoid the inconvenience of an unexpected shutdown, fill to the upper limit, and check the oil level regularly.

4. Install the oil filler cap/dipstick and tighten securely.

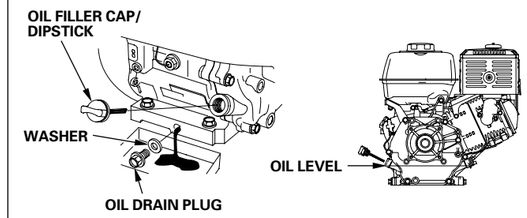

REDUCTION CASE OIL (applicable types)

Recommended Oil

Use the same oil that is recommended for the engine (see page 8).

Oil Level Check

Check the reduction case oil level with the engine stopped and in a level position.

1/2 Reduction Case With Centrifugal Clutch

1. Remove the oil filler cap/dipstick and wipe it clean.

2. Insert and remove the oil filler cap/dipstick without screwing it into the filler hole. Check the oil level shown on the oil filler cap/dipstick.

3. If the oil level is low, add the recommended oil to reach the upper limit mark on the dipstick.

4. Screw in the oil filler cap/dipstick and tighten securely.

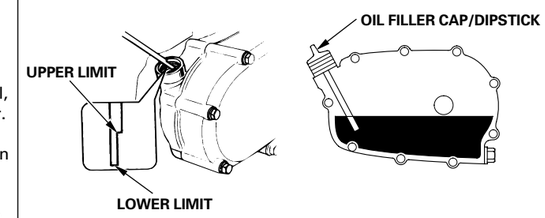

Oil Change

Drain the used oil while the engine is warm. Warm oil drains quickly and completely.

1. Place a suitable container below the reduction case to catch the used oil, then remove the oil filler cap/dipstick, drain plug and washer.

2. Allow the used oil to drain completely, then reinstall the drain plug and a new washer, and tighten the plug securely.

   Please dispose of used motor oil in a manner that is compatible with the environment. We suggest you take used oil in a sealed container to your local recycling center or service station for reclamation. Do not throw it in the trash or pour it on the ground or pour it down a drain.

3. With the engine in a level position, fill with the recommended oil (see page 8) to the upper limit mark on the dipstick. To check the oil level, insert and remove the dipstick without screwing it into the filler hole.

   Reduction case oil capacity: 0.30 L (0.32 US qt, 0.26 Imp qt)

   NOTICE

   Running the engine with a low transmission oil level can cause transmission damage.

4. Screw in the oil filler cap/dipstick and tighten securely.

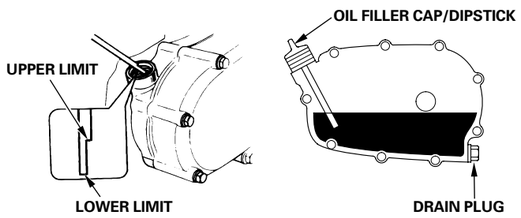

AIR CLEANER

A dirty air cleaner will restrict air flow to the carburetor, reducing engine performance. If you operate the engine in very dusty areas, clean the air filter more often than specified in the MAINTENANCE SCHEDULE (see page 7).

NOTICE

Operating the engine without an air filter, or with a damaged air filter, will allow dirt to enter the engine, causing rapid engine wear. This type of damage is not covered by the Distributor's Limited Warranty.

Inspection

Remove the air cleaner cover and inspect the filter elements. Clean or replace dirty filter elements. Always replace damaged filter elements. If equipped with an oil-bath air cleaner, also check the oil level.

Refer to pages 10 — 11 for instructions that apply to the air cleaner and filter for your engine type.

Cleaning

Dual-Filter Element Types

1. Remove the air cleaner cover nut from the air cleaner cover, and remove the cover.

2. Remove the wing nut from the air filter, and remove the filter.

3. Remove the foam filter from the paper filter.

4. Inspect both air filter elements, and replace them if they are damaged. Always replace the paper air filter element at the scheduled interval (see page 7).

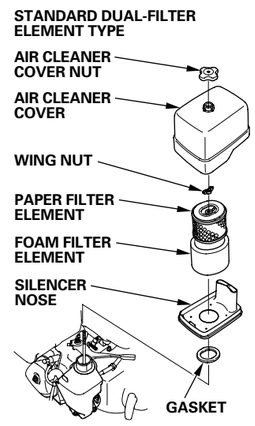

CYCLONE DUAL-FILTER ELEMENT TYPE

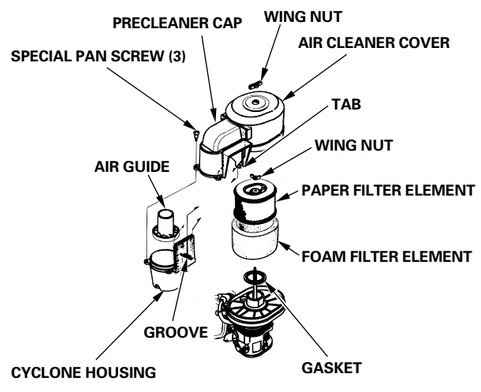

5. Clean the air filter elements if they are to be reused.

   Paper air filter element: Tap the filter element several times on a hard surface to remove dirt, or blow compressed air [not exceeding 207 kPa (2.1 kgf/cm², 30 psi)] through the filter element from the inside. Never try to brush off dirt; brushing will force dirt into the fibers.

   Foam air filter element: Clean in warm soapy water, rinse, and allow to dry thoroughly. Or clean in non-flammable solvent and allow to dry. Dip the filter element in clean engine oil, then squeeze out all excess oil. The engine will smoke when started if too much oil is left in the foam.

6. CYCLONE TYPE ONLY: Remove the three pan-head screws from the precleaner cap, then remove the cyclone housing and air guide. Wash the parts with water, dry them thoroughly, and reassemble them.

   Be sure to install the air guide as shown in the illustration.

   Install the cyclone housing so the air intake tab fits into the groove in the precleaner cap.

7. Wipe dirt from the inside of the air cleaner case and cover using a moist rag. Be careful to prevent dirt from entering the air duct that leads to the carburetor.

8. Place the foam air filter element over the paper element, and reinstall the assembled air filter. Be sure the gasket is in place beneath the air filter. Tighten the air filter wing nut securely.

9. Install the air cleaner cover, and tighten the wing nut securely.

Oil-Bath Type

1. Remove the wing nut, and remove the air cleaner cap and cover.

2. Remove the air filter element from the cover. Wash the cover and filter element in warm soapy water, rinse, and allow to dry thoroughly. Or clean in non-flammable solvent and allow to dry.

3. Dip the filter element in clean engine oil, then squeeze out all excess oil. The engine will smoke if too much oil is left in the foam.

4. Empty the used oil from the air cleaner case, wash out any accumulated dirt with non-flammable solvent, and dry the case.

5. Fill the air cleaner case to the OIL LEVEL mark with the same oil that is recommended for the engine (see page 8).

Oil capacities:
GX240/GX270: 60 cm³ (2.0 US oz , 2.1 Imp oz)
GX340/GX390: 80 cm³ (2.7 US oz , 2.8 Imp oz)

6. Reassemble the air cleaner, and tighten the wing nut securely.

OIL-BATH TYPE

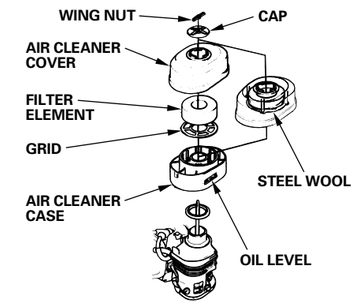

Low Profile Types

1. Unsnap the air cleaner cover clips, remove the air cleaner cover, and remove the air filter element.

2. Wash the element in a solution of household detergent and warm water, then rinse thoroughly, or wash in non-flammable or high flash point solvent. Allow the element to dry thoroughly.

3. Soak the air filter element in clean engine oil and squeeze out the excess oil. The engine will smoke during initial startup if too much oil is left in the element.

4. Reinstall the air filter element and the cover.

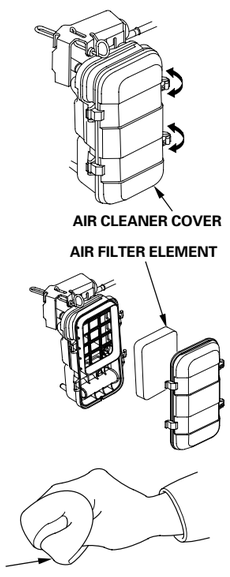

SEDIMENT CUP

Cleaning

⚠ WARNING

Gasoline is highly flammable and explosive, and you can be burned or seriously injured when handling fuel.

- Stop the engine and keep heat, sparks, and flame away.
- Handle fuel only outdoors.
- Wipe up spills immediately.

1. Move the fuel valve to the OFF position, and then remove the fuel sediment cup, fuel filter screen and O-ring.
2. Wash the sediment cup in non-flammable solvent, and dry it thoroughly.

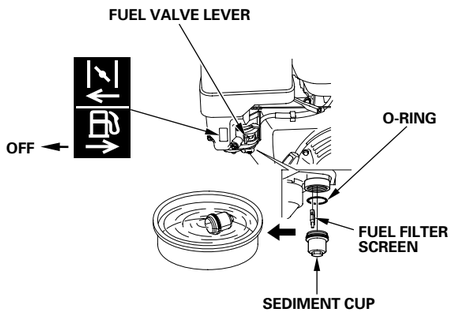

3. Place the O-ring in the fuel valve, and install the sediment cup. Tighten the sediment cup securely.
4. Move the fuel valve to the ON position, and check for leaks. Replace the O-ring if there is any leakage.

SPARK PLUG

Recommended Spark Plugs: BPR6ES (NGK)
W20EPR-U (DENSO)

The recommended spark plug has the correct heat range for normal engine operating temperatures.

NOTICE

An incorrect spark plug can cause engine damage.

If the engine has been running, let it cool before servicing the spark plug.

For good performance, the spark plug must be properly gapped and free of deposits.

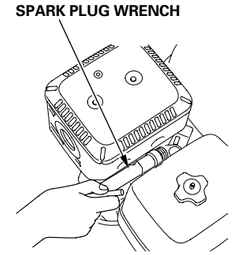

1. Disconnect the spark plug cap, and remove any dirt from around the spark plug area.
2. Remove the spark plug with a 13/16-inch spark plug wrench.
3. Visually inspect the spark plug. Replace it if damaged or badly fouled, if the sealing washer is in poor condition, or if the electrode is worn.
4. Measure the spark plug electrode gap with a wire-type feeler gauge. Correct the gap, if necessary, by carefully bending the side electrode. The gap should be: 0.7－0.8 mm (0.028－0.031 in)

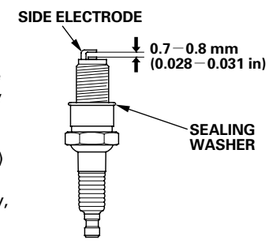

5. Install the spark plug carefully, by hand, to avoid cross-threading.
6. After the spark plug is seated, tighten with a 13/16-inch spark plug wrench to compress the sealing washer.

   When installing a new spark plug, tighten 1/2 turn after the spark plug seats to compress the washer.

   When reinstalling the original spark plug, tighten 1/8－1/4 turn after the spark plug seats to compress the washer.

   NOTICE

   A loose spark plug can overheat and damage the engine. Overtightening the spark plug can damage the threads in the cylinder head.
7. Attach the spark plug cap to the spark plug.

SPARK ARRESTER (applicable types)

In Europe and other countries where the machinery directive 2006/42/EC is enforced, this cleaning should be done by your servicing dealer.
The spark arrester may be standard or an optional part, depending on the engine type. In some areas, it is illegal to operate an engine without a spark arrester. Check local laws and regulations. A spark arrester is available from authorized Honda servicing dealers.
The spark arrester must be serviced every 100 hours to keep it functioning as designed.
If the engine has been running, the muffler will be hot. Allow it to cool before servicing the spark arrester.

Spark Arrester Removal

1. Remove the two 8 mm nuts and remove the muffler from the cylinder.
2. Remove the three 4 mm screws from the exhaust deflector, and remove the deflector.
3. Remove the 6 mm screw and four 5 mm screws from the muffler protector and remove the muffler protector.
4. Remove the 4 mm screw from the spark arrester, and remove the spark arrester from the muffler.

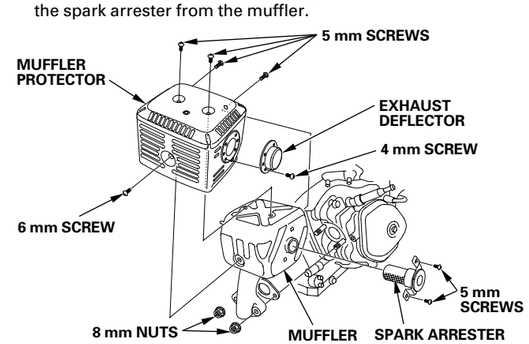

Spark Arrester Cleaning & Inspection

1. Use a brush to remove carbon deposits from the spark arrester screen. Be careful not to damage the screen. Replace the spark arrester if it has breaks or holes.

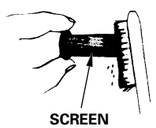

2. Install the spark arrester, muffler protector, exhaust deflector and muffler in the reverse order of disassembly.

IDLE SPEED

Adjustment

1. Start the engine outdoors, and allow it to warm up to operating temperature.
2. Move the throttle lever to its minimum position.
3. Turn the throttle stop screw to obtain the standard idle speed.

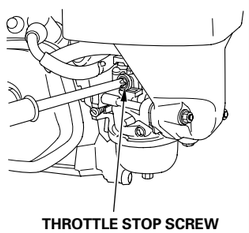

   Standard idle speed: 1,400 ± 150 rpm

HELPFUL TIPS & SUGGESTIONS

STORING YOUR ENGINE

Storage Preparation

Proper storage preparation is essential for keeping your engine trouble-free and looking good. The following steps will help to keep rust and corrosion from impairing your engine's function and appearance, and will make the engine easier to start when you use it again.

Cleaning

If the engine has been running, allow it to cool for at least half an hour before cleaning. Clean all exterior surfaces, touch up any damaged paint, and coat other areas that may rust with a light film of oil.

NOTICE

Using a garden hose or pressure washing equipment can force water into the air cleaner or muffler opening. Water in the air cleaner will soak the air filter, and water that passes through the air filter or muffler can enter the cylinder, causing damage.

Fuel

NOTICE

Depending on the region where you operate your equipment, fuel formulations may deteriorate and oxidize rapidly. Fuel deterioration and oxidation can occur in as little as 30 days and may cause damage to the carburetor and/or fuel system. Please check with your servicing dealer for local storage recommendations.
Gasoline will oxidize and deteriorate in storage. Deteriorated gasoline will cause hard starting, and it leaves gum deposits that clog the fuel system. If the gasoline in your engine deteriorates during storage, you may need to have the carburetor and other fuel system components serviced or replaced.

The length of time that gasoline can be left in your fuel tank and carburetor without causing functional problems will vary with such factors as gasoline blend, your storage temperatures, and whether the fuel tank is partially or completely filled. The air in a partially filled fuel tank promotes fuel deterioration. Very warm storage temperatures accelerate fuel deterioration. Fuel deterioration problems may occur within a few months, or even less if the gasoline was not fresh when you filled the fuel tank.

Fuel system damage or engine performance problems resulting from neglected storage preparation are not covered under the *Distributor's Limited Warranty.*

You can extend fuel storage life by adding a gasoline stabilizer that is formulated for that purpose, or you can avoid fuel deterioration problems by draining the fuel tank and carburetor.

Adding a Gasoline Stabilizer to Extend Fuel Storage Life

When adding a gasoline stabilizer, fill the fuel tank with fresh gasoline. If only partially filled, air in the tank will promote fuel deterioration during storage. If you keep a container of gasoline for refueling, be sure that it contains only fresh gasoline.

1. Add gasoline stabilizer following the manufacturer's instructions.
2. After adding a gasoline stabilizer, run the engine outdoors for 10 minutes to be sure that treated gasoline has replaced the untreated gasoline in the carburetor.
3. Stop the engine.

Draining the Fuel Tank and Carburetor

⚠ WARNING

Gasoline is highly flammable and explosive, and you can be burned or seriously injured when handling fuel.

- Stop the engine and keep heat, sparks, and flame away.
- Handle fuel only outdoors.
- Wipe up spills immediately.

1. Move the fuel valve lever to the OFF position.

2. Place an approved gasoline container below the carburetor, and use a funnel to avoid spilling fuel.

3. Remove the carburetor drain bolt and gasket. Remove the sediment cup and O-ring, then move the fuel valve lever to the ON position.

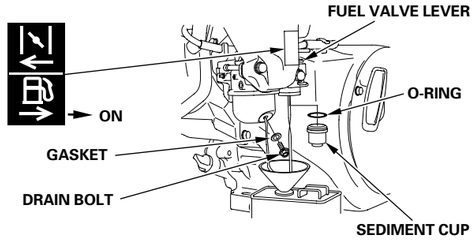

4. After all the fuel has drained into the container, reinstall the drain bolt, gasket, sediment cup and O-ring. Tighten the drain bolt and sediment cup securely.

Engine Oil

1. Change the engine oil (see page 9).

2. Remove the spark plug (see page 12).

3. Pour a teaspoon 5—10 cm^3 (5—10 cc) of clean engine oil into the cylinder.

4. Pull the starter rope several times to distribute the oil in the cylinder.

5. Reinstall the spark plug.

6. Pull the starter rope slowly until resistance is felt and the notch on the starter pulley aligns with the hole at the top of the recoil starter cover. This will close the valves so moisture cannot enter the engine cylinder. Return the starter rope gently.

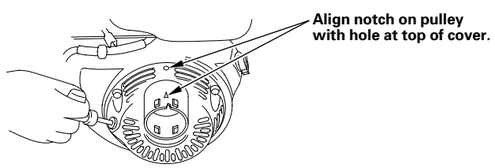

Storage Precautions

If your engine will be stored with gasoline in the fuel tank and carburetor, it is important to reduce the hazard of gasoline vapor ignition. Select a well ventilated storage area away from any appliance that operates with a flame, such as a furnace, water heater, or clothes dryer. Also avoid any area with a spark-producing electric motor, or where power tools are operated.

If possible, avoid storage areas with high humidity, because that promotes rust and corrosion.

Keep the engine level in storage. Tilting can cause fuel or oil leakage.

With the engine and exhaust system cool, cover the engine to keep out dust. A hot engine and exhaust system can ignite or melt some materials. Do not use sheet plastic as a dust cover.
A nonporous cover will trap moisture around the engine, promoting rust and corrosion.

If equipped with a battery for electric starter types, recharge the battery once a month while the engine is in storage.
This will help to extend the service life of the battery.

Removal from Storage

Check your engine as described in the *BEFORE OPERATION CHECKS* section of this manual (see page 4).

If the fuel was drained during storage preparation, fill the tank with fresh gasoline. If you keep a container of gasoline for refueling, be sure it contains only fresh gasoline. Gasoline oxidizes and deteriorates over time, causing hard starting.

If the cylinder was coated with oil during storage preparation, the engine will smoke briefly at startup. This is normal.

TRANSPORTING

If the engine has been running, allow it to cool for at least 15 minutes before loading the engine-powered equipment on the transport vehicle. A hot engine and exhaust system can burn you and can ignite some materials.

Keep the engine level when transporting to reduce the possibility of fuel leakage. Turn the fuel valve to the OFF position (see page 6).

TAKING CARE OF UNEXPECTED PROBLEMS

ENGINE WILL NOT START	Possible Cause	Correction
1. Electric starting (applicable types): Check battery and fuse.	Battery discharged.	Recharge battery.
	Fuse burnt out.	Replace fuse. (p. 15).
2. Check control positions.	Fuel valve OFF.	Move lever to ON position.
	Choke OPEN.	Move lever to CLOSED position unless the engine is warm.
	Engine switch OFF.	Turn engine switch to ON position.
3. Check engine oil level.	Engine oil level low (Oil Alert models).	Fill with the recommended oil to the proper level (p. 9).
4. Check fuel.	Out of fuel.	Refuel (p. 8).
	Bad fuel; engine stored without treating or draining gasoline, or refueled with bad gasoline.	Drain fuel tank and carburetor (p. 14). Refuel with fresh gasoline (p. 8).
5. Remove and inspect spark plug.	Spark plug faulty, fouled, or improperly gapped.	Gap or replace spark plug (p. 12).
	Spark plug wet with fuel (flooded engine).	Dry and reinstall spark plug. Start engine with throttle lever in MAX. position.
6. Take engine to an authorized Honda servicing dealer, or refer to shop manual.	Fuel filter restricted, carburetor malfunction, ignition malfunction, valves stuck, etc.	Replace or repair faulty components as necessary.

ENGINE LACKS POWER	Possible Cause	Correction
1. Check air filter.	Filter element(s) restricted.	Clean or replace filter element(s) (p. 10—11).
2. Check fuel.	Bad fuel; engine stored without treating or draining gasoline, or refueled with bad gasoline.	Drain fuel tank and carburetor (p. 14). Refuel with fresh gasoline (p. 8).
3. Take engine to an authorized Honda servicing dealer, or refer to shop manual.	Fuel filter restricted, carburetor malfunction, ignition malfunction, valves stuck, etc.	Replace or repair faulty components as necessary.

FUSE REPLACEMENT (applicable types)

The electric starter relay circuit and battery charging circuit are protected by a fuse. If the fuse burns out, the electric starter will not operate. The engine can be started manually if the fuse burns out, but running the engine will not charge the battery.

1. Remove the 6 × 12 mm special screw from the rear cover of the engine switch box, and remove the rear cover.

2. Remove the fuse cover, then pull out and inspect the fuse.

   If the fuse is burnt out, discard the burnt-out fuse. Install a new fuse with the same rating as the one that was removed, and reinstall the cover.
   If you have questions regarding the rating of the original fuse, contact your Honda servicing dealer.

   NOTICE

   Never use a fuse with a rating greater than the one originally equipped with the engine. Serious damage to the electrical system or a fire could result.

3. Reinstall the rear cover. Install the 6 × 12 mm screw and tighten it securely.

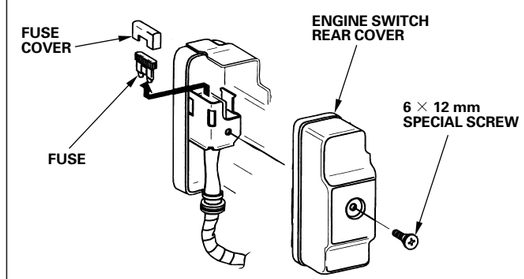

Frequent fuse failure usually indicates a short circuit or an overload in the electrical system. If the fuse burns out frequently, take the engine to a Honda servicing dealer for repair.

TECHNICAL INFORMATION

Serial Number Location
Record the engine serial number in the space below. You will need this information when ordering parts and when making technical or warranty inquiries.

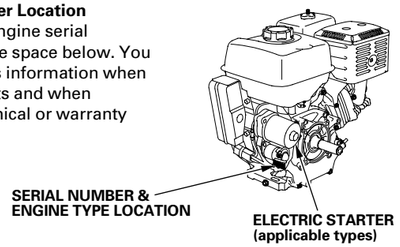

Engine serial number: __ __ __ __ – __ __ __ __ __ __ __

Engine type: ___ ___ ___ ___

Date Purchased: _____ / _____ / _____

Battery Connections for Electric Starter (applicable types)

Recommended Battery

GX240 GX270	12 V – 14 Ah ~ 12 V – 30 Ah
GX340 GX390	12 V – 18 Ah ~ 12 V – 30 Ah

Be careful not to connect the battery in reverse polarity, as this will short circuit the battery charging system. Always connect the positive (+) battery cable to the battery terminal before connecting the negative (–) battery cable, so your tools cannot cause a short circuit if they touch a grounded part while tightening the positive (+) battery cable end.

⚠ WARNING

A battery can explode if you do not follow the correct procedure, seriously injuring anyone nearby.

Keep all sparks, open flames, and smoking materials away from the battery.

WARNING: Battery posts, terminals, and related accessories contain lead and lead compounds. **Wash hands after handling.**

1. Connect the battery positive (+) cable to the starter solenoid terminal as shown.
2. Connect the battery negative (–) cable to an engine mounting bolt, frame bolt, or other good engine ground connection.
3. Connect the battery positive (+) cable to the battery positive (+) terminal as shown.
4. Connect the battery negative (–) cable to the battery negative (–) terminal as shown.
5. Coat the terminals and cable ends with grease.

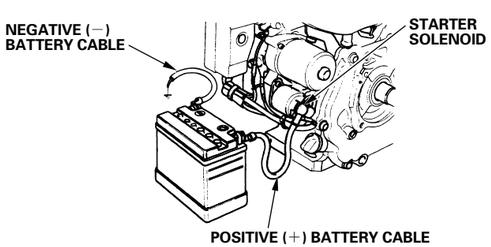

Remote Control Linkage

The throttle and choke control levers are provided with holes for optional cable attachment. The following illustrations show installation examples for a solid wire cable and for a flexible, braided wire cable. If using a flexible, braided wire cable, add a return spring as shown.

It is necessary to loosen the throttle lever friction nut when operating the throttle with a remote-mounted control.

REMOTE THROTTLE LINKAGE

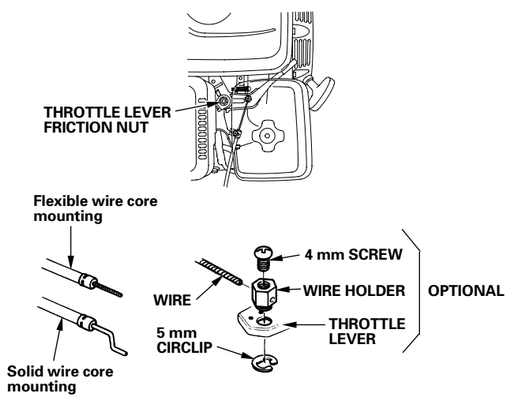

REMOTE CHOKE LINKAGE

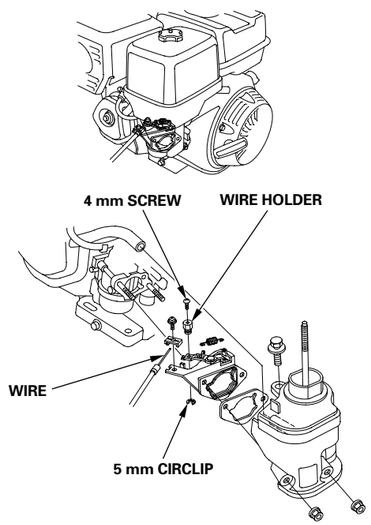

Carburetor Modifications for High Altitude Operation

At high altitude, the standard carburetor air-fuel mixture will be too rich. Performance will decrease, and fuel consumption will increase. A very rich mixture will also foul the spark plug and cause hard starting. Operation at an altitude that differs from that at which this engine was certified, for extended periods of time, may increase emissions.

High altitude performance can be improved by specific modifications to the carburetor. If you always operate your engine at altitudes above 1,500 meters (5,000 feet), have your servicing dealer perform this carburetor modification. This engine, when operated at high altitude with the carburetor modifications for high altitude use, will meet each emission standard throughout its useful life.

Even with carburetor modification, engine horsepower will decrease about 3.5% for each 300 meter (1,000 foot) increase in altitude. The effect of altitude on horsepower will be greater than this if no carburetor modification is made.

NOTICE

When the carburetor has been modified for high altitude operation, the air-fuel mixture will be too lean for low altitude use. Operation at altitudes below 1,500 meters (5,000 feet) with a modified carburetor may cause the engine to overheat and result in serious engine damage. For use at low altitudes, have your servicing dealer return the carburetor to original factory specifications.

Emission Control System Information

Source of Emissions
The combustion process produces carbon monoxide, oxides of nitrogen, and hydrocarbons. Control of hydrocarbons and oxides of nitrogen is very important because, under certain conditions, they react to form photochemical smog when subjected to sunlight. Carbon monoxide does not react in the same way, but it is toxic.

Honda utilizes appropriate air/fuel ratios and other emissions control systems to reduce the emissions of carbon monoxide, oxides of nitrogen, and hydrocarbons.
Additionally, Honda fuel systems utilize components and control technologies to reduce evaporative emissions.

The U.S., California Clean Air Act, and Environment Canada
EPA, California, and Canadian regulations require all manufacturers to furnish written instructions describing the operation and maintenance of emission control systems.

The following instructions and procedures must be followed in order to keep the emissions from your Honda engine within the emission standards.

Tampering and Altering
Tampering with or altering the emission control system may increase emissions beyond the legal limit. Among those acts that constitute tampering are:

- Removal or alteration of any part of the intake, fuel, or exhaust systems.
- Altering or defeating the governor linkage or speed-adjusting mechanism to cause the engine to operate outside its design parameters.

Problems That May Affect Emissions
If you are aware of any of the following symptoms, have your engine inspected and repaired by your servicing dealer.

- Hard starting or stalling after starting.
- Rough idle.
- Misfiring or backfiring under load.
- Afterburning (backfiring).
- Black exhaust smoke or high fuel consumption.

Replacement Parts
The emission control systems on your Honda engine were designed, built, and certified to conform with EPA, California (models certified for sale in California), and Canadian emission regulations. We recommend the use of Honda Genuine parts whenever you have maintenance done. These original-design replacement parts are manufactured to the same standards as the original parts, so you can be confident of their performance. The use of replacement parts that are not of the original design and quality may impair the effectiveness of your emission control system.
A manufacturer of an aftermarket part assumes the responsibility that the part will not adversely affect emission performance. The manufacturer or rebuilder of the part must certify that use of the part will not result in a failure of the engine to comply with emission regulations.

Maintenance
Follow the maintenance schedule on page 7 . Remember that this schedule is based on the assumption that your machine will be used for its designed purpose. Sustained high-load or high-temperature operation, or use in unusually wet or dusty conditions, will require more frequent service.

Air Index
(Models certified for sale in California)

An Air Index Information label is applied to engines certified to an emission durability time period in accordance with the requirements of the California Air Resources Board.

The bar graph is intended to provide you, our customer, the ability to compare the emissions performance of available engines. The lower the Air Index, the less pollution.

The durability description is intended to provide you with information relating to the engine's emission durability period. The descriptive term indicates the useful life period for the engine's emission control system. See your *Emission Control System Warranty* for additional information.

Descriptive Term	Applicable to Emissions Durability Period
Moderate	50 hours (0－80 cc, inclusive) 125 hours (greater than 80 cc)
Intermediate	125 hours (0－80 cc, inclusive) 250 hours (greater than 80 cc)
Extended	300 hours (0－80 cc, inclusive) 500 hours (greater than 80 cc) 1,000 hours (225 cc and greater)

Specifications

GX240/GX270 (PTO shaft type S, with fuel tank)

Length × Width × Height		355 × 428 × 422 mm (14.0 × 16.9 × 16.6 in)
Dry mass [weight]		25.8 kg (56.9 lbs)
Engine type		4-stroke, overhead valve, single cylinder
Displacement [Bore × Stroke]		270 cm³ (16.5 cu-in) [77.0 × 58.0 mm (3.0 × 2.3 in)]
Net power (in accordance with SAE J1349*)	GX240	5.9 kW (8.0 PS, 7.9 bhp) at 3,600 rpm
	GX270	6.3 kW (8.6 PS, 8.4 bhp) at 3,600 rpm
Max. Net torque (in accordance with SAE J1349*)	GX240	18.3 N·m (1.86 kgf·m, 13.4 lbf·ft) at 2,500 rpm
	GX270	19.1 N·m (1.94 kgf·m, 14.1 lbf·ft) at 2,500 rpm
Engine oil capacity		1.1 L (1.2 US qt, 1.0 Imp qt)
Fuel tank capacity		5.3 L (1.40 US gal, 1.17 Imp gal)
Cooling system		Forced air
Ignition system		C.D.I. magneto
PTO shaft rotation		Counterclockwise

GX340/GX390 (PTO shaft type S, with fuel tank)

Length × Width × Height		380 × 460 × 448 mm (15.0 × 18.1 × 17.6 in)
Dry mass [weight]		31.7 kg (69.9 lbs)
Engine type		4-stroke, overhead valve, single cylinder
Displacement [Bore × Stroke]		389 cm³ (23.7 cu-in) [88.0 × 64.0 mm (3.5 × 2.5 in)]
Net power (in accordance with SAE J1349*)	GX340	8.0 kW (10.9 PS, 10.7 bhp) at 3,600 rpm
	GX390	8.7 kW (11.8 PS, 11.7 bhp) at 3,600 rpm
Max. Net torque (in accordance with SAE J1349*)	GX340	26.4 N·m (2.69 kgf·m, 19.5 lbf·ft) at 2,500 rpm
	GX390	26.5 N·m (2.7 kgf·m, 19.5 lbf·ft) at 2,500 rpm
Engine oil capacity		1.1 L (1.2 US qt, 1.0 Imp qt)
Fuel tank capacity		6.1 L (1.61 US gal, 1.34 Imp gal)
Cooling system		Forced air
Ignition system		C.D.I. magneto
PTO shaft rotation		Counterclockwise

* The power rating of the engine indicated in this document is the net power output tested on a production engine for the engine model and measured in accordance with SAE J1349 at 3,600 rpm (Net Power) and at 2,500 rpm (Max. Net Torque). Mass production engines may vary from this value.
Actual power output for the engine installed in the final machine will vary depending on numerous factors, including the operating speed of the engine in application, environmental conditions, maintenance, and other variables.

Tuneup Specifications GX240/GX270/GX340/GX390

ITEM	SPECIFICATION	MAINTENANCE
Spark plug gap	0.7－0.8 mm (0.028－0.031 in)	Refer to page: 12
Idle speed	1,400 ± 150 rpm	Refer to page: 13
Valve clearance (cold)	IN: 0.15 ± 0.02 mm EX: 0.20 ± 0.02 mm	See your authorized Honda dealer
Other specifications	No other adjustments needed.	

Quick Reference Information

Fuel	Unleaded gasoline (Refer to page 8)	
	U.S.	Pump octane rating 86 or higher
	Except U.S.	Research octane rating 91 or higher
		Pump octane rating 86 or higher
Engine oil	SAE 10W-30, API SJ or later, for general use. Refer to page 8.	
Reduction case oil	Same oil as engine oil, see above (applicable types).	
Spark plug	BPR6ES (NGK) W20EPR-U (DENSO)	
Maintenance	Before each use: • Check engine oil level. Refer to page 9. • Check reduction case oil (applicable types). Refer to page 9. • Check air filter. Refer to page 10.	
	First 20 hours: • Change engine oil. Refer to page 9. • Change reduction case oil (applicable types). Refer to page 10.	
	Subsequent: Refer to the maintenance schedule on page 7.	

Wiring Diagrams

With Oil Alert and Electric Starter

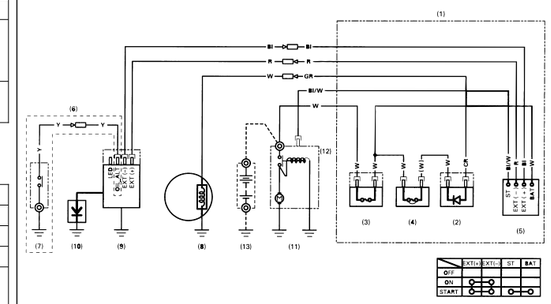

With Oil Alert and Without Electric Starter

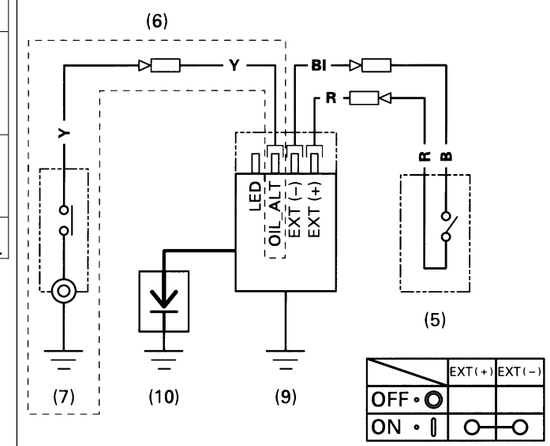

(1) CONTROL BOX
(2) RECTIFIER
(3) FUSE
(4) CIRCUIT PROTECTOR
(5) ENGINE SWITCH
(6) Type with Oil Alert unit
(7) OIL LEVEL SWITCH
(8) CHARGING COIL
(9) IGNITION COIL
(10) SPARK PLUG
(11) STARTER MOTOR
(12) STARTER SOLENOID
(13) BATTERY (12 V)

Bl	Black	Br	Brown
Y	Yellow	O	Orange
Bu	Blue	Lb	Light blue
G	Green	Lg	Light green
R	Red	P	Pink
W	White	Gr	Gray

CONSUMER INFORMATION

Warranty and Distributor/Dealer Locator Information

United States, Puerto Rico, and U.S. Virgin Islands:
Visit our website: www.honda-engines.com

Canada:
Call (888) 9HONDA9
or visit our website: www.honda.ca

For European Area:
Visit our website: http://www.honda-engines-eu.com

Australia:
Call (03) 9270 1348
or visit our website: www.hondampe.com.au

Customer Service Information

Servicing dealership personnel are trained professionals. They should be able to answer any question you may have. If you encounter a problem that your dealer does not solve to your satisfaction, please discuss it with the dealership's management. The Service Manager, General Manager, or Owner can help. Almost all problems are solved in this way.

United States, Puerto Rico, and U.S. Virgin Islands:
If you are dissatisfied with the decision made by the dealership's management, contact the Honda Regional Engine Distributor for your area.

If you are still dissatisfied after speaking with the Regional Engine Distributor, you may contact the Honda Office as shown.

All Other Areas:
If you are dissatisfied with the decision made by the dealership's management, contact the Honda Office as shown.

《Honda's Office》
When you write or call, please provide this information:
- Equipment manufacturer's name and model number that the engine is mounted on
- Engine model, serial number, and type (see page 16)
- Name of dealer who sold the engine to you
- Name, address, and contact person of the dealer who services your engine
- Date of purchase
- Your name, address and telephone number
- A detailed description of the problem

United States, Puerto Rico, and U.S. Virgin Islands:
American Honda Motor Co., Inc.
Power Equipment Division
Customer Relations Office
4900 Marconi Drive
Alpharetta, GA 30005-8847

Or telephone: (770) 497-6400, 8:30 am - 7:00 pm ET

Canada:
Honda Canada, Inc.
Please visit www.honda.ca
for address information

Telephone: (888) 9HONDA9 Toll free
(888) 946-6329
Facsimile: (877) 939-0909 Toll free

Australia:
Honda Australia Motorcycle and Power Equipment Pty. Ltd.
1954－1956 Hume Highway
Campbellfield Victoria 3061

Telephone: (03) 9270 1111
Facsimile: (03) 9270 1133

For European Area:
Honda Europe NV.
European Engine Center

http://www.honda-engines-eu.com

All Other Areas:
Please contact the Honda distributor in your area for assistance.

HONDA
The Power of Dreams

RED LION

P.O. Box 12818
Oklahoma City, OK 73157-0818
Ph/Tél/Tlf: 866.969.0000
Fax/Télec: 405.228.1561
www.RedLionProducts.com

RL-SP25T
RL-SP33T
RL-SP33V
RL-SP50T
RL-SP50V

EN ENGLISH

Red Lion submersible sump pumps are recommended for use in basins or lift stations and are suitable for pumping effluent, wastewater, and other non-explosive, non-corrosive liquids.

Red Lion pumps are carefully packaged, inspected, and tested to ensure safe operation and delivery. When you receive your pump, examine it carefully to determine that there are no broken or damaged parts that may have occurred during shipment. If damage has occurred, make notation and notify the firm that you purchased the pump from. They will assist you in replacement or repair, if required.

SAFETY GUIDELINES

⚠WARNING⚠

RISK OF ELECTRIC SHOCK: This pump is supplied with a grounding conductor and grounding-type attachment plug. To reduce the risk of electric shock, be certain that it is connected only to a properly grounded, grounding-type receptacle.

Your pump is equipped with a 3-prong electrical plug. The third prong grounds the pump to prevent possible electrical shock hazard. Do not remove the third prong from the plug. A separate branch circuit is recommended. Do not use an extension cord.

When a pump is in a basin, etc., do not touch motor, pipes or water until unit is unplugged or shut off. If shut-off box is not accessible, call the electric company to shut off service to the house, or call your local fire department for instructions. Failure to follow the warning can result in fatal electrical shock.

The flexible jacketed cord assembly mounted to the pump must not be modified in any way, with the exception of shortening the cord to fit into a control panel. Any splice between the pump and the control panel must be made within a junction box and mounted outside of the basin, and comply with the National Electrical Code. Do not use the power cord for lifting the pump.

The pump motor is equipped with an automatic resetting thermal protector and may restart unexpectedly. Protector tripping is an indication of motor overloading as a result of excessively high or low voltage, inadequate wiring, incorrect motor connections, or a defective motor or pump.

1. Read all instructions and Safety Guidelines thoroughly. Failure to follow the guidelines and instructions could result in serious bodily injury and/or property damage.
2. DO NOT USE TO PUMP FLAMMABLE OR EXPLOSIVE FLUIDS SUCH AS GASOLINE, FUEL OIL, KEROSENE, ETC. DO NOT USE IN EXPLOSIVE ATMOSPHERES OR HAZARDOUS LOCATIONS AS CLASSIFIED BY NEC, ANSI/NFPA70. FAILURE TO FOLLOW THIS WARNING CAN RESULT IN PERSONAL INJURY AND/OR PROPERTY DAMAGE.
3. During normal operation the sump pump is immersed in water. Also, during rain storms, water may be present in the surrounding area of the pump. Caution must be used to prevent bodily injury when working near the pump:
   a. The plug must be removed from the receptacle prior to touching, servicing or repairing the pump.
   b. To minimize possible fatal electrical shock hazard, extreme care should be used when changing fuses. Do not stand in water while changing fuses or insert your finger into the fuse socket.
4. Do not run the pump in a dry basin, if the pump is run in a dry basin, the surface temperature of the pump will rise to a high level. This high level could cause skin burns if the pump is touched and will cause serious damage to your pump.
5. Do not oil the motor. The pump housing is sealed. A high grade dielectric oil devoid of water has been put into the motor housing at the factory. Use of other oil could cause serious electric shock and/or permanent damage to the pump.
6. This pump's motor housing is filled with a dielectric oil for motor heat transfer and lifetime lubrication of the bearings. This oil is non-toxic to aquatic life. However, suffocation can occur if oil is left on the water surface. If oil escapes the motor housing it can be removed from the surface quickly by placing newspapers on the water surface to soak up the oil.
7. In any installations where property damage and/or personal injury might result from an inoperative or leaking pump due to power outages, discharge line clockage, or any other reason, a backup system(s) and/or alarm should be used.

SPECIFICATIONS

Discharge Size:	1-1/2" FNPT
Intake Size:	1/8" screened opening
Pump Housing:	Thermoplastic
Volute:	Thermoplastic
Screen:	Thermoplastic
Impeller:	Vortex design
Motor:	Single phase PSC with automatic reset thermal overload protection
Hardware:	300 series stainless steel
Bearings:	Ball bearings
Pump Shaft Seal:	Mechanical, spring-loaded, stationary carbon with Nitrile boot and rotating ceramic seat
Cooling:	The motor housing contains oil to cool the motor and to lubricate the bearings and seals. These pumps are capable of operating with the motor housing partially exposed for extended periods of time, providing sufficient motor cooling and bearing lubrication. However, for the best cooling and longest motor life, the liquid level being pumped should normally be above the top of the pump housing.

INSTALLATION

Pump must be installed in a suitable gas-tight basin that is at least 14" in diameter and 18" deep.

Pump can be installed with ABS, PVC, polyethylene or galvanized steel pipe. Proper adaptors are required to connect plastic pipe to pump.

Pump must be placed on a hard level surface. Never place pump directly on clay, earth or gravel surfaces.

A check valve must be used in the discharge line to prevent back flow of liquid into the basin. The check valve should be a free flow valve that will easily pass solids.

CAUTION: For best performance of check valves, when handling solids install in a horizontal position or at an angle of no more than 45°. Do not install check valve in a vertical position as solids may settle in valve and prevent opening on start-up.

When a check valve is used, drill a relief hole (1/8" or 3/16" diameter) in the discharge pipe. This hole should be located below the floor line between the pump discharge and the check valve. Unless such a relief hole is provided, the pump could "air lock" and will not pump water even though it will run.

WIRING

⚠WARNING⚠

Check local electrical and building codes before installation. The installation must be in accordance with their regulations as well as the most recent National Electrical Code (NEC).

To conform to the National Electrical Code all pumps must be wired with 14 AWG or larger wire. For runs to 250', 14 AWG wire is sufficient. For longer runs, consult a qualified electrician or the factory.

Pump should be connected or wired to its own circuit with no other outlets or equipment in the circuit line. Fuses and circuit breaker should be of ample capacity in the electrical circuit. See table below.

PUMP	H.P.	VOLTAGE	FUSE OR CIRCUIT BREAKER AMPS
RL-SP25T	1/4	115	15
RL-SP33T/RL-SP33V	1/3	115	15
RL-SP50T/RL-SP50V	1/2	115	15

OPERATION

TESTING PUMP OPERATION

1. These pumps are equipped with a float switch.
2. When these pumps are installed in a basin with a sealed cover, switch operation cannot be observed. The sump cover usually will have a spare hole that is plugged with a rubber plug. This plug can be removed and switch operation can be observed.
3. Plug power cord into a grounded receptacle with voltage consistent with pump voltage as indicated on pump nameplate.
4. Run water into basin until pump starts.
5. Be sure gate valve in discharge line is open.
6. Allow pump to operate through several on-off cycles.

MAINTENANCE

If pump does not operate properly, consult the troubleshooting chart. If trouble cannot be located with these steps shown, consult your pump dealer or take pump to a Red Lion authorized service center.

CAUTION: When working on pump or switch, always unplug pump power cord in addition to removing fuse or shutting off circuit breaker before working on pump.

CLEANING IMPELLER AND VOLUTE

1. Remove screws that hold base to volute, and volute to motor housing.
2. Remove volute and clean impeller and volute passage. Do not use strong solvents on impeller.
3. Be sure impeller turns freely after cleaning.
4. **WARNING:** DO NOT REMOVE IMPELLER. REMOVAL OF IMPELLER REQUIRES SPECIAL TOOLS AND IS TO BE DONE ONLY BY AN AUTHORIZED SERVICE CENTER.

   DO NOT REMOVE MOTOR HOUSING COVER. WARRANTY IS VOID IF MOTOR HOUSING COVER, IMPELLER OR SEALS HAVE BEEN REMOVED.

   ANY REPAIR ON MOTOR MUST BE DONE BY AN AUTHORIZED RED LION SERVICE CENTER.

FR FRANÇAIS

Les pompes submersibles à puisard de Red Lion sont recommandées pour les bassins ou les stations de pompage et sont conçues pour le pompage des eaux résiduaires, des eaux usées et d'autres liquides non explosifs et non corrosifs.

Les pompes Red Lion sont soigneusement emballées, et testées pour assurer une livraison et un fonctionnement sans problèmes. Lorsque vous recevez votre pompe, examinez-la attentivement pour vous assurer qu'il n'y a pas eu de pièce cassée ou endommagée pendant l'acheminement.

S'il y a eu des dégâts, prenez-en note et signalez-le au magasin où vous avez acheté la pompe. Ils vous aideront pour le remplacement ou la réparation, si nécessaire. Cette pompe est conçue pour pomper de l'eau. NE POMPEZ PAS de produit chimique, de solvant, d'eau salée, ou de liquides épais tels que des huiles ou de la graisse.

DIRECTIVES DE SÉCURITÉ

⚠ AVERTISSEMENT ⚠

DANGER D'ÉLECTROCUTION : Cette pompe est équipée d'un conducteur de terre et d'une prise de terre mâle. Pour éviter tout danger d'électrocution, s'assurer que la prise est connectée à une prise de courant bipolaire plus terre.

Votre pompe est dotée d'une fiche à trois branches. La troisième branche a pour fonction de mettre la pompe à la terre afin de prévenir tout choc électrique. Ne pas couper cette troisième branche. Il est recommandé de brancher la pompe à un circuit indépendant. Éviter d'utiliser une rallonge.

Lorsqu'une pompe est dans un réservoir, éviter de toucher au moteur, aux tuyaux ou à l'eau si la pompe n'est pas débranchée ou hors tension. Si le panneau électrique n'est pas accessible, communiquer avec votre compagnie d'électricité pour qu'elle coupe l'alimentation de la maison, ou avec votre service d'incendie pour connaître la marche à suivre dans ces circonstances. Le non-respect de cet avertissement pourrait résulter en un choc électrique fatal.

Le fil d'alimentation flexible de la pompe, gainé de no doit être modifié d'aucune façon, sauf pour être raccourci afin qu'il entre dans un panneau de commande. Toute épissure entre la pompe et le panneau de commande doit être faite à l'intérieur d'une boîte d'accouplement et installée hors du réservoir; elle doit aussi être conforme au Code national de l'électricité. Ne pas soulever la pompe à l'aide du fil d'alimentation.

Le moteur de la pompe est pourvu d'un dispositif de protection thermique à démarrage automatique ; elle peut redémarrer à tout moment. Le déclenchement du dispositif de protection indique une surchauffe du moteur provoquée par un voltage excessif ou insuffisant, un câblage non approprié, des erreurs de raccordement du moteur, une défaillance du moteur ou une défaillance de la pompe.

1. Bien lire les instructions du Guide de sécurité. Le non-respect des consignes de sécurité peut causer de graves blessures ou des dommages à la propriété, ou les deux.
2. Ne pas utiliser pour pomper des liquides explosifs ou inflammables (essence, huile, kérosène, etc.) Ne pas utiliser dans des environnements explosifs ou des lieux considérés comme dangereux (voir Code nat. de l'Élect., ANSI/NFPA70). Le non-respect de cette mesure de sécurité peut causer des dommages ou des blessures.
3. Durant le fonctionnement normal du système, la pompe à puisard est immergée, donc invisible. De plus, pendant les orages, il pourrait y avoir de l'eau autour de la pompe. C'est pourquoi il faut faire attention si on travaille près de celle-ci.
   a. Débrancher la pompe avant d'y toucher ou d'en faire l'entretien ou la réparation.
   b. Afin de réduire le risque d'électrocution, faire preuve d'une grande prudence pendant le remplacement des fusibles. Ne pas avoir les pieds dans l'eau pendant le remplacement des fusibles et ne pas insérer le doigt dans les culots de fusibles.
4. Ne pas faire fonctionner la pompe dans un réservoir à sec. Si cela se produisait, la température de surface de la pompe deviendrait assez élevée pour causer de graves brûlures et endommager sérieusement la pompe.
5. Ne pas lubrifier le moteur. Le boîtier de la pompe est scellé. De l'huile diélectrique de haute qualité sans eau a été mise dans le boîtier en usine. L'utilisation d'un autre type d'huile pourrait causer un choc électrique grave ou gravement endommager la pompe, ou les deux.
6. Le boîtier du moteur de cette pompe est rempli d'une huile diélectrique, pour un transfert de chaleur optimal et une lubrification durable des paliers. Cette huile n'est d'aucun danger pour la vie aquatique. Il y a toutefois risque de suffocation si l'huile reste à la surface de l'eau. S'il devait y avoir fuite, retirer l'huile de la surface en plaçant du papier journal sur l'eau afin d'absorber l'huile.
7. L'utilisation d'un ou de plusieurs systèmes auxiliaires et/ou d'un système d'alarme est recommandée pour toute installation potentiellement dangereuse (fuite ou défectuosité causées par une coupure de courant, un blocage du circuit de refoulement ou pour toute autre raison) pour les personnes ou la propriété.

CARACTÉRISTIQUES TECHNIQUES

Taille d'écoulement :	1-1/2" FNPT
Taille d'aspiration :	Ouverture grillagée de 1/8 po
Boîtier de la pompe :	Thermoplastique
Volute :	Thermoplastique
Grille :	Thermoplastique
Turbine :	Nylon à conception tourbillonnaire, avec des aubes de surpression
Moteur :	Monophasé PSC avec protection automatique contre les surchauffes.
Attaches :	Acier inoxydable, série 300
Roulements :	Bille
Joint étanche de l'arbre du moteur :	Mécanique. À ressort, carbone stationnaire avec la butée de nitriles et le siège en céramique tournant
Refroidissement :	Le boîtier du moteur de cette pompe est rempli d'une huile, pour un transfert de chaleur optimal et une lubrification durable des paliers. Même si le boîtier du moteur était partiellement exposé, ces pompes pourraient fonctionner pour de longues périodes de temps, à condition que le refroidissement et la lubrification soient adéquats. Toutefois, il est recommandé que le niveau du liquide à pomper soit au-dessus du boîtier de fonte afin d'assurer le meilleur refroidissement possible et de prolonger la durée de vie du moteur.

INSTALLATION

La pompe doit être installée dans un bassin approprié, étanche à l'air et mesurant au moins 36 cm (14 po) de diamètre et 45 cm (18 po) de profondeur.

La pompe peut être installée avec des tuyaux d'acier galvanisé, de polyéthylène, d'ABS ou de PVC. Des adaptateurs sont requis pour raccorder le tuyau de plastique à la pompe.

La pompe doit être placée sur une surface plate et dure. Ne jamais placer la pompe directement sur de l'argile, de la terre ou des surfaces en concassé.

Un clapet de retenue doit être placé dans la conduite de sortie afin de prévenir tout reflux de liquide à l'intérieur du réservoir. Le clapet devrait être à flot libre et pouvoir laisser passer des matières solides.

MISE EN GARDE : Afin d'obtenir une performance maximale des clapets de retenue pendant le pompage de matières solides, installer les clapets à l'horizontale ou à un angle ne dépassant pas 45°. Éviter de les installer à la verticale, car des matières solides pourraient rester coincées dans le clapet et empêcher son ouverture lors de la mise en marche de la pompe.

Dans ce cas, percer dans le tuyau d'écoulement un trou de dégagement d'un diamètre de 1/8 po à 3/16 po, en-dessous du sol entre l'écoulement de la pompe et le soupape d'arrêt pour éviter qu "un bouchon d'air" se produise qui empêcherait l'appareil de pompar même s'il fonctionnait normalement.

CÂBLAGE

⚠ AVERTISSEMENT ⚠

Vérifier les codes locaux de l'électricité et du bâtiment avant l'installation. Celle-ci devrait être conforme avec ces règlements ainsi qu'avec le plus récent Code national de l'Électricité.

Afin de respecter les exigences du Code national de l'Électricité, toute les pompes doivent être branchées avec du fil #14 AWG ou plus gros. Pour des longueurs de fils intérieures à 250 pi, un fil #14 AWG convient. Consulter un électricien ou l'usine pour des longueurs plus élevées.

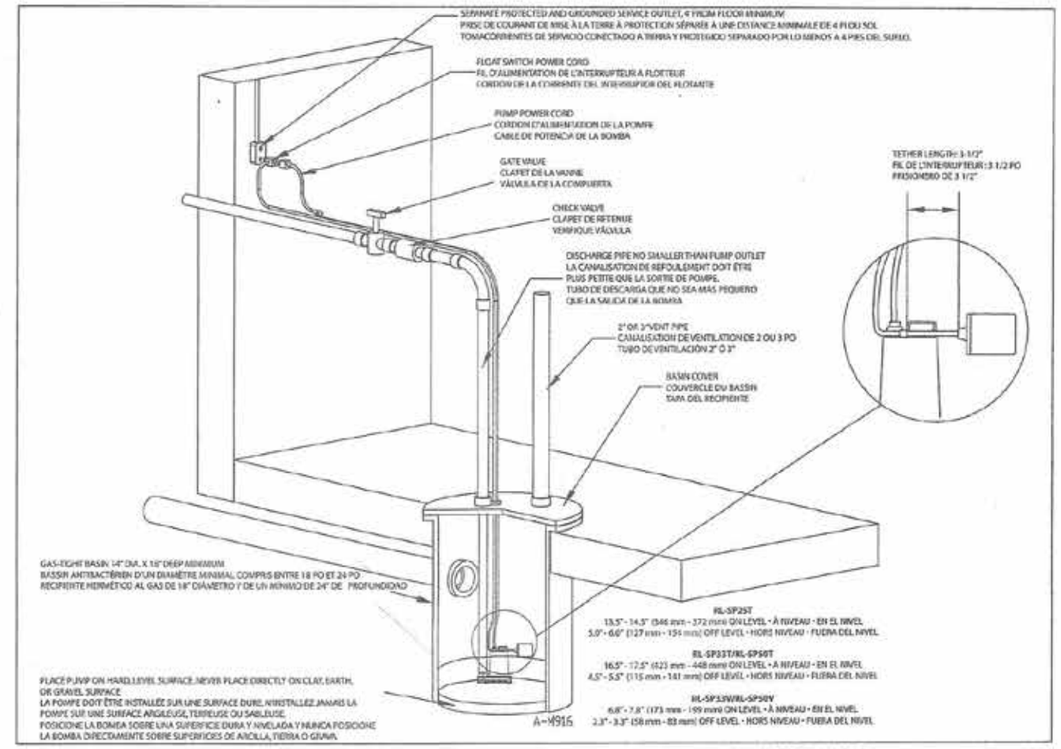

FIG. 1 - TYPICAL INSTALLATION • INSTALLATION TYPIQUE • INSTALACION TIPICA

La pompe devrait être branchée à un circuit indépendant. Aucun autre appareil ne devrait être branché à ce circuit, et les fusibles et disjoncteurs devraient être de capacité adéquate. Consulter le tableau ci-dessous.

POMPE	CH	VOLTAGE	AMPÉRAGE DU FUSIBLE OU DU DISJONCTEUR
RL-SP25T	1/4	115	15
RL-SP33T/RL-SP33V	1/3	115	15
RL-SP50T/RL-SP50V	1/2	115	15

FONCTIONNEMENT

VÉRIFICATION DU BON FONCTIONNEMENT DE LA POMPE

1. Ces pompes sont pourvues d'un interrupteur à flotteur.
2. Lorsque ces pompes sont installées dans bassin avec un couvercle scellé, le fonctionnement du commutateur ne peut être observé. Le couvercle du puisard comporte généralement un trou supplémentaire obstrué par un bouchon en caoutchouc. Ce bouchon peut être enlevé pour observer le fonctionnement du commutateur.
3. Brancher les fils d'alimentation de la pompe et de l'interrupteur dans une prise mise à la terre en s'assurant que la tension de celle-ci correspond à la tension indiquée sur la plaque signalétique.
4. Remplir le réservoir d'eau jusqu'à ce que la pompe se mette en marche.
5. S'assurer que la vanne à obturateur du conduit de sortie est ouverte.
6. Laisser la pompe s'allumer et s'éteindre à plusieurs reprises.

ENTRETIEN

Si la pompe ne fonctionne pas convenablement, consultez le tableau de relève des dérangements. Si vous pouvez identifier le problème en suivant les étapes indiquées, consultez le fournisseur de votre pompe ou rapportez la pompe à un centre de service autorisé Red Lion.

MISE EN GARDE : Avant tout entretien ou réparation effectué sur la pompe ou l'interrupteur, toujours débrancher la pompe et retirer le fusible (ou déclencher le disjoncteur).

NETTOYAGE DE LA TURBINE ET DE LA VOLUTE

1. Enlever les vis qui retiennent le base à la volute et la volute au boîtier du moteur.
2. Retirer la volute et nettoyer la turbine ainsi que le passage de la volute. Éviter d'utiliser de puissants solvants sur la turbine.
3. Veillez à ce que la turbine tourne librement une fois le nettoyage terminé.
4. **AVERTISSEMENT :** LAISSEZ LA TURBINE EN PLACE. LE RETRAIT DE LA TURBINE NÉCESSITE DES OUTILS SPÉCIAUX ET NE PEUT ÊTRE

EFFECTUÉ QU À UN CENTRE DE SERVICE AUTORISÉ.

LAISSER LE COUVERCLE DU BOÎTIER DU MOTEUR EN PLACE. LE RETRAIT DU COUVERCLE DU BOÎTIER DU MOTEUR, DE LA TURBINE OU DES JOINTS ANNULE LA GARANTIE.

TOUTE RÉPARATION DU MOTEUR DOIT ÊTRE EFFECTUÉE À UN CENTRE DE SERVICE AUTORISÉ Red Lion.

ES INSTRUCCIONES

Las bombas sumergibles Red Lion para sumideros se recomiendan para cubetas y estaciones elevadoras y son idóneas para bombear efluentes y otros líquidos que no sean explosivos o corrosivos.

Las bombas Red Lion se envían cuidadosamente, registradas y probada para asegurar la entrega y operación segura. Cuando usted recibe su bomba, examina lo cuidadosamente para determinar que no hay roto o dañado partes quepuedan haber ocurrido durante el embarque. Si el daño ha ocurrido, hecho anotación y notificado la firma que usted compró la bomba desde. Ellos ayudarán usted en el reemplazo o la reparación, si requirió.

NORMAS DE SEGURIDAD

⚠ ADVERTENCIA ⚠

PELIGRO DE CHOQUE ELÉCTRICO: Esta bomba está dotada de un cable de puesta tierra y un enchufe accesorio de puesta a tierra. Para reducir el riesgo de choque eléctrico, cerciórese de que se encuentre conectada a un receptáculo del tipo de puesta a tierra, debidamente puesto a tierra.

Su bomba está dotada de un enchufe eléctrico de tres dientes. El tercer diente es para ponerla a tierra, con el fin de evitar el riesgo de posibles choques eléctricos. No quite el tercer diente del enchufe. Se recomienda un circuito de ramal independiente. No utilice un cable de extensión.

Cuando la bomba se encuentre en un dique seco, etc., no toque el motor, los tubos ni el agua, mientras no se encuentre desconectada o apagada. Si hay agua o humedad en sus instalaciones, no toque el área húmeda mientras no se haya cortado toda la electricidad. Si la caja de interruptores no está accesible, llame a la compañía de electricidad para que interrumpe el servicio a la casa, o pida instrucciones al departamento local de bomberos. El hacer caso omiso de esta advertencia, puede producir un choque eléctrico mortal.

El conjunto de cables flexibles con manguito de cloruro polivinílico montado en la bomba, no debe modificarse de ninguna manera, salvo para acortar el cable, con el fin de ajustarlo a un tablero de mandos. Cualquier empalme entre la bomba y el tablero de mandos debe efectuarse dentro de una caja de conexiones y montarse fuera del dique seco. Además, debe ajustarse al Código Eléctrico Nacional. No utilice el cable eléctrico para levantar la bomba.

El motor de la bomba está equipado con un protector térmico de reposición automática y puede reposicionarse inesperadamente. El accionamiento del protector es una indicación de sobrecarga del motor debida a un voltaje demasiado alto o bajo, un cableado inadecuado, conexiones de motor incorrectas o un motor o bombe defectuosos.

1. Lea todo el instructivo, el no seguir estas recomendaciones pueda causar daños daños a la persona y al equipo.
2. NO USE LA UNIDAD PARA BOMBEAR LIQUIDOS INFLAMABLES NI EXPLOSIVOS TALES COMO GASOLINA, FUELOIL, QUEROSENO, ETC. NO SE USE EN AMBIENTES EXPLOSIVOS O LUGARES PELIGROSOS, SEGUN LA CLASIFICACION DEL CODIGO ELECTRICO NACIONAL (NEC) Y LA NORMA NFPA70 DEL INSTITUTO NACIONAL NORTEAMERICANO DE NORMAS. EL HACER CASO OMISO DE ESTA ADVERTENCIA, PUEDE TRAER COMO RESULTADO LESIONES CORPORALES, DAÑOS MATERIALES O AMBOS.
3. Durante el funcionamiento normal la bomba de sumidero está inmersa en agua. Además, durante las tormentas, puede haber agua en el área circundante de la bomba. Se debe observar precaución para prevenir lesiones personales al trabajar cerca de la bomba.
   a. Debe sacarse el enchufe de la toma de corriente, antes de tocar, limpiar o reparar la bomba.
   b. Para disminuir el riesgo de choques eléctricos posiblemente fatales, tenga sumo cuidado al cambiar los fusibles. No pise agua mientras cambie los fusibles ni introduzca el dedo en el receptáculo del fusible.
4. No haga funcionar la bomba en un depósito seco. Si la bomba es operada en un depósito seco, la temperatura de la superficie de la bomba se elevará a un alto nivel. Este alto nivel podría causar quemaduras de la piel si se toca la bomba y puede causar daños graves a la bomba.
5. No engrase el motor. La caja de la bomba está sellada. Desde la fábrica se ha colocado un aceite dieléctrico de alto grado y repelente al agua dentro de la carcasa del motor. El uso de otro tipo de aceite podría causar daños eléctricos graves y/o daños permanentes a la bomba.
6. El alojamiento del motor de esta bomba está lleno con un aceite dieléctrico para la transferencia de calor y la lubricación de por vida de los cojinetes. Este aceite no es tóxico para la vida acuática. Sin embargo, puede ocurrir la muerte de ésta, si el aceite quede sobre la superficie. Para quitar rápidamente el aceite que pueda haberse escapado del alojamiento del motor, coloque periódicos sobre la superficie del agua para absorber el aceite.
7. EN CUALQUIER INSTALACION DONDE PUEDAN OCURRIR DAÑOS MATERIALES Y/O LESIONES PERSONALES QUE RESULTEN DEL FUNCIONAMIENTO INADECUADO O DE FUGAS EN LA BOMBA A CAUSA DE FALLOS EN LA ALIMENTACION ELECTRICA, BLOQUEO DE LA LINEA DE LA DESCARGA, O CUALQUIER OTRA RAZON, SE DEBERA USAR UNO O VARIOS SISTEMAS DE RESPALDO Y/O ALARMAS.

ESPECIFICACIONES

Tamaño de la descarga:	1-1/2" FNPT
Tamaño de la toma:	Abertura con filtro de 1/8 pulgadas de diámetro
Bastidor de la bomba:	Termoplástico
Voluta:	Termoplástico
Difusor:	Termoplástico
Propulsor:	Diseño de remolino con aletas de alivio de la presión
Motor:	Monofásico PSC con protección contra sobrecarga térmica con restablecimiento automático
Piezas metálicas:	Serie 300, de acero inoxidable
Cojinete:	Pelota
Sello del eje de la bomba:	Carbón estacionario, mecánico, cargado por resorte con asiento rotatorio de cerámica.
Enfriamiento:	El alojamiento del motor de esta bomba está lleno con un aceite para la transferencia de calor y la lubricación de por vida de los cojinetes. Estas bombas pueden funcionar largo tiempo con el estator parcialmente expuesto, siempre y cuando el refrigerante del motor y la lubricación de los cojinetes sea suficiente. No obstante, para un enfriamiento óptimo y una vida máxima del motor, el nivel del líquido que se bombeo, normalmente debe encontrarse por encima del bomba caso.

INSTALACION

La bomba se debe instalar en una cubeta apropiada, hermética al gas, que tenga por lo menos 26 cm (14 pulg.) de diámetro y 46 cm (18 pulg.) de profundidad.

La bomba puede instalarse con tubos ABS, de cloruro polivinílico (PVC) o de acero galvanizado. Para conectar el tubo plástico a la bomba, se requieren adaptadores apropiados.

La bomba debe colocarse en una superficie dura y nivelada. No la coloque nunca directamente sobre superficies de arcilla, tierra o grava.

Debe utilizarse una válvula de retención en el tubo de descarga, para evitar el reflujo en el dique seco. La válvula de retención debe ser una válvula sin estrangulación, que permita pasar fácilmente cuerpos sólidos.

Cuando se utilice una válvula de retención, perfórese un agujero de descompresión (de un diámetro de 1/8 ó 3/16 de pulgada) en el tubo de descarga. Este agujero deberá encontrarse debajo de la línea de la superficie del suelo, entre la descarga de la bomba y la válvula de retención. A menos que se proporcione tal agujero de descompresión, la bomba podría llenarse de burbujas de aire y no bombeará el agua, aunque sí funcionará.

CABLES

⚠ ADVERTENCIA ⚠

Estudie las normas locales sobre electricidad y construcción, antes de instalar los cables. La instalación debe ajustarse a sus regulaciones así como a las del Código Eléctrico Nacional (NEC) más reciente.

Para ajustarse a las disposiciones del Código Eléctrico Nacional, todas las bombas deben tener cables 14 AWG o mayores. Para recorridos 250 pies, baltá el cable de 14 AWG. Para recorridos mayores, consulte a un electricista competente o a la fábrica.

La bomba debe enchufarse o conectarse en su propio circuito, sin otras tomas o equipos en la línea del circuito. Los fusibles e interruptores automáticos del circuito eléctrico deben ser de gran capacidad. Remítase al siguiente cuadro:

BOMBA	KP	VOLTIOS	AMPERAJE DEL FUSIBLE O INTERRUPTOR AUTOMATICO
RL-SP25T	1/4	115	15
RL-SP33T/RL-SP33V	1/3	115	15
RL-SP50T/RL-SP50V	1/2	115	15

FUNCIONAMIENTO

PRUEBA DEL FUNCIONAMIENTO DE LA BOMBA

1. SP25 bombas están equipadas con un interruptor remoto de flotador.
2. Al instalar estas bombas en una cubeta con la tapa sellada, no se puede observar el funcionamiento del interruptor. La tapa de la bomba generalmente cuenta con un orificio cubierto con un tapón de caucho. Este tapón se puede retirar para observar el funcionamiento del interruptor.
3. Conecte el cable eléctrico del interruptor de control remoto accionado por un flotador a un receptáculo puesto a tierra, con un voltaje similar al de la bomba, como se indica en la placa del fabricante de la bomba. Conecte el cable eléctrico de la bomba en el enchufe del interruptor de control remoto, accionado por el flotador.

4. Haga correr agua en la bomba, hasta que la bomba arranque.
5. Cerciórese de que la válvula de paso directo del tubero de descarga se encuentre abierta.
6. Permite que la bomba funcione durante varios ciclos de apagado y encendido.

MANTENIMIENTO

Si la bomba no funciona apropiadamente, consulte el plano de investigación de averías. Si no puede encontrar el problema siguiendo estos pasos, consulte al distribuidor de la bomba o lleve la bomba a un centro de servicio autorizado de Red Lion.

PRECAUCION: Cuando trabaje en la bomba o en el interruptor, desconecte siempre el cable eléctrico, además de quitar el fusible o apagar el interruptor automático, antes de trabajar en la bomba.

LIMPIEZA DEL ROTOR Y EL DIFUSOR

1. Retire los tornillos que sujetan la base al espiral y el espiral al alojamiento del motor.
2. Limpie el rotor y el conducto del difusor. No utilice detergentes fuertes en el impulsor.
3. Asegúrese de que el impulsor gire libremente antes de limpiarlo.
4. **ADVERTENCIA:** NO QUITE EL IMPULSOR. PARA QUITAR EL IMPULSOR SE REQUIEREN HERRAMIENTAS ESPECIALES Y ESTO DEBE HACERSE SOLO EN UN CENTRO DE SERVICIO AUTORIZADO.

   NO QUITE LA CUBIERTA DE LA CAJA DEL MOTOR. LA GARANTIA ES NULA SI SE QUITA LA CUBIERTA DE LA CAJA DEL MOTOR, EL IMPULSOR O LOS OBTURADORES.

   CUALQUIER REPARACION DEL MOTOR DEBE HACERSE EN UN CENTRO DE SERVICIO AUTORIZADO DE Red Lion.

LIMITED WARRANTY

For warranty consideration, the Red Lion brand (hereafter "the Brand") warrants that the products specified in this warranty are free from defects in material or workmanship of the Brand. During the time periods and subject to the terms and conditions hereinafter set forth, the Brand will repair or replace to the original user or consumer any portion of this product which proves defective due to materials or workmanship of the Brand. At all times the Brand shall have and possess the sole right and option to determine whether to repair or replace defective equipment, parts, or components. The Brand has the option to inspect any product returned under warranty to confirm that the warranty applies before repair or replacement under warranty is approved. This warranty sets forth the Brand's sole obligation and purchaser's exclusive remedy for defective product. Return defective product to the place of purchase for warranty consideration.

WARRANTY PERIOD - 24 months (RL-SP25T, RL-SP33T, RL-SP33V)/36 months (RL-SP50V, RL-SP50T) from date of purchase by the user. (No warranty on brushes, impeller or cam on models with brush-type motors and/or flex-vane impellers.) In the absence of suitable proof of the purchase date, the effective period of this warranty will begin on the product's date of manufacture.

LABOR, ETC. COSTS: The Brand shall IN NO EVENT be responsible or liable for the cost of field labor or other charges incurred by any customer in removing and/or affixing any product, part, or component thereof.

PRODUCT IMPROVEMENTS: The Brand reserves the right to change or improve its products or any portions thereof without being obligated to provide such a change or improvement for units sold and/or shipped prior to such change or improvement.

GENERAL TERMS AND CONDITIONS: This warranty shall not apply to damage due to acts of God, normal wear and tear, normal maintenance services and the parts used in connection with such service, lightning or conditions beyond the control of the Brand, nor shall it apply to products which, in the sole judgment of the Brand, have been subject to negligence, abuse, accident, misapplication, tampering, alteration; nor due to improper installation, operation, maintenance or storage; nor to excess of recommended maximums as set forth in the instructions.

Warranty will be VOID if any of the following conditions are found:

1. Product is used for purposes other than those for which it was designed and manufactured
2. Product not installed in accordance with applicable codes, ordinances, and good trade practices
3. Product connected to voltage other than indicated on nameplate
4. Pump used to circulate anything other than fresh water at approximately room temperature
5. Pump allowed to operate dry (fluid supply cut off)
6. Sealed motor housing opened or product dismantled by customer
7. Cord cut off to a length less than three feet

DISCLAIMER: Any oral statements about the product made by the seller, the Brand, the representatives, or any other parties do not constitute warranties, shall not be relied upon by the user, and are not part of the contract for sale. Seller's and the Brand's only obligation, and buyer's only remedy, shall be the replacement and/or repair by the Brand of the product as described above. NEITHER SELLER NOR THE BRAND SHALL BE LIABLE FOR ANY INJURY, LOSS OR DAMAGE, DIRECT, INCIDENTAL OR CONSEQUENTIAL (INCLUDING, BUT NOT LIMITED TO, INCIDENTAL OR CONSEQUENTIAL DAMAGES FOR LOST PROFITS, LOST SALES, INJURY TO PERSON OR PROPERTY, OR ANY OTHER INCIDENTAL OR CONSEQUENTIAL LOSS), ARISING OUT OF THE USE OR THE INABILITY TO USE THE PRODUCT, AND THE USER AGREES THAT NO OTHER REMEDY SHALL BE AVAILABLE TO IT. Before using, the user shall determine the suitability of the product for his intended use, and user assumes all risk and liability whatsoever in connection therewith. **THE WARRANTY AND REMEDY DESCRIBED IN THIS LIMITED WARRANTY IS AN EXCLUSIVE WARRANTY AND REMEDY AND IS IN LIEU OF ANY OTHER WARRANTY OR REMEDY, EXPRESSED OR IMPLIED, WHICH OTHER WARRANTIES AND REMEDIES ARE HEREBY EXPRESSLY EXCLUDED, INCLUDING BUT NOT LIMITED TO ANY IMPLIED WARRANTY OF MERCHANTABILITY OR FITNESS FOR A PARTICULAR PURPOSE, TO THE EXTENT EITHER APPLIES TO A PRODUCT SHALL BE LIMITED IN DURATION TO THE PERIODS OF THE EXPRESSED WARRANTIES GIVEN ABOVE.** Some states and countries do not allow the exclusion or limitations on how long an implied warranty lasts or the exclusion or limitation of incidental or consequential damages, so the above exclusion or limitations may not apply to you. This warranty gives you specific legal rights, and you may also have other rights which vary from state to state and country to country.

GARANTIE LIMITÉE

Lors des requêtes en garantie, la marque de Red Lion (ci-après appelée « la Marque ») garantit les produits spécifiés dans cette garantie contre tout défaut de matériaux et de main-d'œuvre. Pendant les périodes couvertes par la garantie et selon les conditions indiquées dans la présente, la Marque réparera ou remplacera toute partie de ce produit présentant une défaillance liée aux matériaux ou à la main-d'œuvre, et ce uniquement auprès du premier utilisateur ou acheteur. En tout temps, la Marque conserve le droit et l'option de déterminer si un équipement, des pièces ou des composants défectueux doivent être réparés ou remplacés. La Marque peut inspecter tout produit sous garantie qui lui est retourné afin de confirmer que la garantie s'applique, avant d'approuver la réparation ou le remplacement. Cette garantie stipule l'unique obligation de la Marque et le recours exclusif de l'acheteur pour un produit défectueux. Retourner le produit défectueux au détaillant pour les requêtes en garantie.

PÉRIODE DE GARANTIE – PRODUITS : 24 mois (RL-SP25T, RL-SP33T, RL-SP33V)/36 mois (RL-SP50V, RL-SP50T) à partir de la date d'achat par l'utilisateur. (Aucune garantie n'est offerte pour les balais, le rotor ou la came sur les modèles avec moteur à balais et/ou rotor flexible à palettes.) En l'absence d'une preuve adéquate de la date d'achat, la période d'application commencera à partir de la date de fabrication.

COÛTS DE MAIN-D'ŒUVRE, ETC. : EN AUCUN CAS la Marque ne pourra être tenue responsable du coût de la main-d'œuvre ou d'autres frais encourus par un client lors de la dépose et/ou de la réparation d'un produit, d'une partie ou d'un composant.

AMÉLIORATIONS DU PRODUIT : La Marque se réserve le droit de modifier ou d'améliorer ses produits, ou une quelconque de leur partie, sans obligation de fournir une telle modification ou amélioration aux appareils déjà vendus et/ou expédiés avant que de telles modifications ou améliorations n'aient été apportées.

CONDITIONS ET MODALITÉS GÉNÉRALES : Cette garantie ne couvre pas les dommages causés par une catastrophe naturelle, l'usure normale, la foudre ou des conditions hors du contrôle de la Marque; et elle ne couvre pas non plus les services d'entretien normaux et aux pièces usées associés à un tel service, ni les produits qui, selon le jugement exclusif de la Marque, ont été exposés à la négligence, l'abus, un accident, une application inappropriée, une altération, une modification; ni aux dommages causés par une installation, une utilisation, un entretien ou un entreposage inadéquat; ni à une utilisation au-delà des maximums recommandés, comme il est indiqué dans les instructions.

La garantie est NULLE si l'une des conditions suivantes s'applique :

1. Le produit est utilisé pour des applications autres que celles pour lesquelles il a été conçu et fabriqué.
2. Le produit n'est pas installé dans le respect des codes et règlements applicables et selon les bonnes pratiques acceptées dans l'industrie.
3. Le produit a été branché à une tension autre que celle indiquée sur la plaque signalétique.
4. La pompe a été utilisée avec des liquides autres que de l'eau douce approximativement à la température ambiante.
5. La pompe a fonctionné à sec (alimentation en liquide coupée).
6. Le carter moteur scellé a été ouvert ou le produit a été démonté par le client.
7. Le cordon a été coupé à une longueur inférieure à 0,9 m (3 pieds).

AVIS DE NON-RESPONSABILITÉ : Toute déclaration verbale portant sur le produit, faite par le vendeur, la Marque, les représentants ou toute autre partie ne constitue pas une garantie et ne peut être considérée par l'utilisateur comme faisant partie du contrat de vente. La seule obligation du vendeur ou de la Marque et le seul recours de l'acheteur est le remplacement et/ou la réparation du produit par la Marque, comme il est décrit ci-dessus. LE VENDEUR OU LA MARQUE NE PEUT ÊTRE TENU RESPONSABLE POUR TOUTE BLESSURE, PERTE OU DOMMAGE DIRECT, INDIRECT OU CONSÉCUTIF (INCLUANT MAIS SANS S'Y LIMITER LES DOMMAGES INDIRECTS OU CONSÉCUTIFS LIÉS À UNE PERTE DE PROFITS, UNE PERTE DE VENTES, DES BLESSURES OU DES DOMMAGES MATÉRIELS, OU TOUT AUTRE INCIDENT OU PERTE CONSÉCUTIVE), RÉSULTANT DE L'UTILISATION OU DE L'IMPOSSIBILITÉ D'UTILISER LE PRODUIT; DE PLUS, L'UTILISATEUR ACCEPTE QU'AUCUN AUTRE RECOURS N'EST DISPONIBLE. Avant de commencer à utiliser le produit, l'utilisateur doit déterminer si ce produit est adapté à l'usage prévu; et l'utilisateur assume tous les risques et toutes les responsabilités qui sont liés à cette utilisation. **LA GARANTIE ET LES MESURES CORRECTIVES DÉCRITES DANS LA PRÉSENTE GARANTIE LIMITÉE CONSTITUENT UNE GARANTIE ET DES MESURES CORRECTIVES EXCLUSIVES EN LIEU ET PLACE DE TOUTE AUTRE GARANTIE ET MESURE CORRECTIVE, EXPRESSE OU IMPLICITE; ET TOUTE AUTRE GARANTIE ET MESURE CORRECTIVE EST EXPRESSÉMENT EXCLUE, INCLUANT, MAIS SANS S'Y LIMITER, TOUTE GARANTIE IMPLICITE DE QUALITÉ MARCHANDE OU D'ADAPTATION À UN USAGE PARTICULIER.** Certaines juridictions et certains pays interdisent les exclusions ou les limitations de durée d'une garantie implicite ou l'exclusion ou la limitation des dommages indirects ou consécutifs; les limitations ou exclusions ci-dessus pourraient donc ne pas s'appliquer à votre cas. Cette garantie vous donne des droits légaux spécifiques et vous pourriez également jouir d'autres droits qui varient selon la juridiction ou le pays.

GARANTÍA LIMITADA

Para consideraciones de la garantía, la marca de Red Lion (denominada de ahora en adelante "la Marca"), garantiza que los productos especificados en esta garantía están libres de defectos en los materiales y en la mano de obra de la Marca. Durante el periodo, y sujeto a los términos estipulados en este documento, la Marca reparará o reemplazará al cliente o usuario original cualquier parte del producto que presente defectos materiales o de fabricación atribuibles a la Marca. En todo momento, la Marca tendrá y poseerá el único derecho y opción de determinar si repara o reemplaza el equipo, piezas o componentes defectuosos. La Marca tiene la opción de inspeccionar cualquier producto devuelto bajo los términos de la garantía para confirmar que esté cubierto por la garantía antes aprobar la reparación o reemplazo según la garantía. Esta garantía constituye la única obligación de la Marca y es el único recurso que tiene el cliente si el producto tiene defectos. Devuelva el producto defectuoso al sitio de compra para que sea considerado bajo la garantía.

DURACIÓN DE LA GARANTÍA – PRODUCTOS: 24 meses (RL-SP25T, RL-SP33T, RL-SP33V)/36 meses (RL-SP50V, RL-SP50T) a partir de la fecha de compra por el cliente. (Los cepillos, el impulsor o la leva en los modelos con motor de cepillo y/o los impulsores de aletas flexibles no están cubiertos por la garantía.) En caso de que no exista un comprobante adecuado de la fecha de compra, el periodo efectivo de esta garantía comenzará a partir de la fecha de fabricación del producto.

MANO DE OBRA Y OTROS COSTOS: La Marca DE NINGUNA MANERA será responsable por el costo de la mano de obra en el campo u otros cargos en que incurra cualquier cliente al retirar y/o instalar algún producto, pieza o componente.

MEJORAS AL PRODUCTO: La Marca se reserva el derecho de cambiar o mejorar sus productos, o cualquier parte de los mismos, sin que por ello tenga la obligación de realizar dicho cambio o mejora en las unidades vendidas y/o despachadas con anterioridad.

TÉRMINOS Y CONDICIONES GENERALES: Esta garantía no tiene efecto si los daños se deben a fuerza mayor, desgaste por uso normal, servicios de mantenimiento normal y la piezas utilizadas para dicho servicio, rayos o condiciones que estén fuera del alcance de la Marca, como tampoco tendrá vigencia en aquellos productos que, a criterio exclusivo de la Marca, hayan sido sujetos a negligencia, maltrato, accidente, mal uso, manipulación indebida, alteración o instalación, funcionamiento, mantenimiento o almacenamiento indebidos, o si se sobrepasan los valores máximos recomendados, estipulados en estas instrucciones.

Esta garantía quedará ANULADA si se hallan cualesquiera de las siguientes condiciones:

1. El producto se utiliza para propósitos distintos a aquellos para los cuales fue diseñado y fabricado
2. El producto no fue instalado de conformidad con las normas, reglamentos y prácticas comerciales aceptadas
3. El producto se conecta a un voltaje distinto al que se indica en la placa de identificación
4. La bomba se utilizó con fluidos distintos al agua dulce a temperatura ambiente aproximadamente
5. La bomba funcionó sin líquido (se cortó el suministro de líquido)
6. El cliente abrió el alojamiento sellado del motor o desarmó el producto
7. El cable se cortó a un largo menor que 0,9 m (3 pies)

EXENCIÓN DE RESPONSABILIDAD: Toda afirmación verbal con respecto al producto, por parte del vendedor, la Marca, los representantes o cualquier otra parte, no constituye garantía alguna, no debe ser considerada como tal por el usuario y no forma parte del contrato de venta. La única obligación del vendedor y la Marca, y el único recurso del comprador, será el reemplazo y/o reparación que hará la Marca del producto, tal como se describió anteriormente. NI EL VENDEDOR NI LA MARCA SERÁN RESPONSABLES POR CUALQUIER LESIÓN, PÉRDIDA O DAÑO DIRECTO, INCIDENTAL O INDIRECTO (LO QUE INCLUYE, SIN LIMITACIÓN, DAÑOS INCIDENTALES O INDIRECTOS POR PÉRDIDA DE GANANCIAS, DE VENTAS, LESIONES PERSONALES O MATERIALES, O CUALQUIER OTRO DAÑO INCIDENTAL O INDIRECTO) QUE RESULTARA DEL USO O INCAPACIDAD DE USAR EL PRODUCTO. Y EL USUARIO ACUERDA QUE NO HAY NINGÚN OTRO RECURSO. Antes de usarlo, el usuario deberá determinar la idoneidad del producto para el uso propuesto y asumirá todos los riesgos y toda la responsabilidad que ello implique. **LA GARANTÍA Y RECURSO DESCRITOS EN ESTA GARANTÍA LIMITADA REPRESENTAN UNA GARANTÍA Y RECURSO EXCLUSIVOS Y SE OFRECEN EN LUGAR DE CUALQUIER OTRA GARANTÍA O RECURSO, EXPLÍCITO O IMPLÍCITO. POR EL PRESENTE, SE EXCLUYEN EXPLÍCITAMENTE OTRAS GARANTÍAS Y RECURSOS, INCLUSO, PERO SIN LIMITARSE A CUALQUIER GARANTÍA IMPLÍCITA DE COMERCIALIZACIÓN O IDONEIDAD PARA UN PROPÓSITO ESPECÍFICO. EN LA MEDIDA EN QUE CORRESPONDA A UN PRODUCTO, LA GARANTÍA ESTARÁ LIMITADA EN DURACIÓN A LOS PERÍODOS DE LAS GARANTÍAS EXPRESAS DESCRITAS ANTERIORMENTE.** Algunos estados y países no permiten la exclusión o las limitaciones sobre la duración de las garantías implícitas ni la exclusión o limitación de responsabilidades por daños incidentales o indirectos, por lo que puede que las exclusiones o limitaciones anteriores no correspondan en su caso particular. Esta garantía le otorga a usted derechos legales específicos y es posible que usted también tenga otros derechos que varían según el estado o país.

TROUBLESHOOTING INFORMATION • INFORMATION SUR LA RELÈVE DES DÉRANGEMENTS • INFORMACION DE INVESTIGACION DE AVERÍAS

PROBLEM • FONCTIONNEMENT DÉFECTEUX • PROBLEMA	PROBABLE CAUSES • CAUSES PROBABLES • CAUSAS PROBABLES	CORRECTIVE ACTION • SOLUTIONS • SOLUCION
Pump does not turn on. • La pompe ne peut être mise sous tension. • La bomba no se activa.	Pump not plugged in. • La pompe n'est pas branchée. • La bomba no está enchufada.	Plug in pump. • Branchez le puisard. • Enchufar la bomba.
	Circuit breaker shutoff or fuse removed. • Disjoncteur coupé ou fusible enlevé. • Desactivación del disyuntor o se ha retirado el fusible.	Turn on circuit breaker or replace fuse. • Mettez le disjoncteur sous tension ou remplacez le fusible. • Active el disyuntor o reemplace el fusible.
	Accumulation of trash on float. • Accumulation de débris sur le flotteur. • Acumulación de desperdicios en el flotador.	Clean float. • Nettoyez le flotteur. • Limpie el flotador.
	Float obstruction. • Flotteur bloqué. • Obstrucción del flotador.	Check float path and provide clearance. • Vérifiez la voie de passage du flotteur et dégagez-la au besoin. • Verifique el flotador y proporcione espacio limpio.
	Defective motor. • Moteur défectueux. • Motor defectuoso.	Have pump serviced by authorized service center. • Faites réparer la pompe à un centre de service autorisé. • Lleve la bomba a un centro de servicio autorizado.
Pump will not shut off. • Le moteur de la pompe ne s'arrête pas. • La bomba no se apaga.	Float obstruction. • Flotteur bloqué. • Obstrucción del flotador.	Check float path and provide clearance. • Vérifiez la voie de passage du flotteur et dégagez-la au besoin. • Verifique el flotador y proporcione espacio limpio.
	Pump is air locked. • Poche d'air dans la pompe. • Burbujas de aire en la bomba.	Shut power off for approximately 1 minute, then restart. Repeat several times to clear air from pump. • Couper le courant pendant 1 minute environ puis recommencer. Répéter cette opération plusieurs fois pour évacuer l'air de la pompe. • Desconecte la electricidad durante un minuto, aproximadamente. Luego, vuelvala a conectar. Repita varias veces, para purgar el aire de la bomba.
	Liquid inflow matches pump capacity. • Afflux de liquide correspondant au volume de la pompe. • El caudal que entra es igual a la capacidad de la bomba.	Larger pump required. • Une pompe plus puissante est nécessaire. • Se requiere una bomba mayor.
Pump runs but does not discharge liquid. • La pompe fonctionne mais il n'y a pas d'écoulement de liquide. • La bomba funciona, pero no descarga líquido.	Check valve installed backwards. • Montage à l'envers de la soupape d'arrêt. • Válvula de retención montada al revés	Check flow indicating arrow on check valve body to insure it is installed properly. • Vérifier la flèche indiquant l'écoulement pour s'assurer que la soupape d'arrêt est bien montée. • Inspeccione la flecha indicadora del flujo en el cuerpo de la válvula de retención, para cerciorase de que se encuentre instalada correctamente.
	Check valve stuck or plugged. • Soupape d'arrêt bloquée ou obstruée. • Válvula de retención atorada u ocluida.	Remove check valve and inspect for proper operation. • Démonter et vérifier la soupape d'arrêt pour un bon fonctionnement. • Quite la válvula de retención, y verifique que funcione debidamente
	Lift too high for pump. • Aspiration trop puissante pour la pompe. • Altura de impulsión excesiva para la bomba.	Check rating table. • Vérifier le tableau d'évaluation. • Estudie la tabla de capacidad.
	Inlet to impeller plugged. • Arrivée de la roue à autres obstrués. • Toma de la rueda móvil conectada.	Pull pump and clean. • Tirer la pompe pour le nettoyer. • Saque la bomba y limpiela.
	Pump is air locked. • Présence d'une poche d'air dans la pompe. • La bomba está llena de burbujas de aire.	(See corrective action above.) • (Voir ci-dessus la solution.) • (Remítase a la solución anterior.)
Pump does not deliver rated capacity. • La pompe ne pompe pas le volume normal. • La bomba no impele a su capacidad normal.	Lift too high for pump. • Aspiration trop puissante pour la pompe. • Altura de impulsión excesiva para la bomba.	Check rated pump performance. • Vérifier les caractéristiques techniques de la pompe. • Verifique el rendimiento normal de la bomba.
	Low voltage, speed too slow. • Voltage et vitesse pas assez puissants. • Voltaje demasiado bajo, velocidad demasiado baja	Check for proper supply voltage to make certain it corresponds to nameplate voltage. • S'assurer que le voltage correspond bien à celui mentionné sur la plaque. • Verifique que el suministro de electricidad sea adecuado, para cerciorarse de que corresponde al voltaje indicado en la placa del fabricante.
	Impeller or discharge pipe is clogged. • Obstruction de la roue à ailes ou du tuyau d'écoulement. • La rueda móvil en el tubo de descarga está ocluida.	Pull pump and clean. Check pipe for scale or corrosion. • Tirer la pompe pour la nettoyer. Vérifier la présence de dépôts ou de corrosion dans les tuyaux. • Saque la bomba y limpiela. Inspeccione el tubo, en busca de capas de óxido o corrosión.
Pump cycles continually. • La pompe recommence son cycle sans s'arrêter. • La bomba se enciende y apaga continuamente	No check valve in long discharge pipe allowing liquid to drain back into sump. • Absence de soupape d'arrêt dans le grand tuyau d'écoulement ainsi permettant l'écoulement du liquide dans le puisard de réception. • Falta la válvula de retención en el tubo de descarga largo, lo cual permite que el líquido refluya a la sumidero.	Install a check valve in discharge line. • Installez une soupape d'arrêt sur le tuyau d'écoulement. • Instale una válvula de retención en la tubería de descarga.
	Check valve leaking. • Fuite à la soupape d'arrêt. • Escape en la válvula de retención.	Inspect check valve for correct operation. • Vérifier la soupape d'arrêt pour obtenir un bon fonctionnement. • Verifique que la válvula de retención funcione correctamente.
	Basin too small for inflow. • Bassin de réception trop petit pour l'afflux. • El fondo del sumidero es muy pequeño o está inundado.	Install larger basin. • Installer une bassin de réception plus grand. • Instale un sumidero con un fondo mayor.

mecc alte

Member of CISQ Federation
RINA
ISO 9001:2008
Certified Quality System

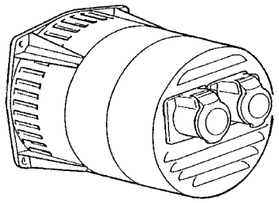

S16W

I

ALTERNATORI SERIE S16W

MANUALE PER L'USO E LA MANUTENZIONE

GB

S16W SERIES ALTERNATORS

USE AND MAINTENANCE MANUAL

F

ALTERNATEURS SERIE S16W

MANUEL POUR L'ENTRETIEN ET LA MANUTENTION

D

GENERATOREN DER BAUREIHE S16W

HANDBUCH FÜR DIE BEDIENUNG UND WARTUNG

E

ALTERNADORES DE LA SERIE S16W

MANUAL PARA EL USO Y MANTENIMIENTO

C US INSULATION SYSTEM

FRANCE
MECC ALTE INTERNATIONAL S.A.
Z.E. LA GAGNERIE
16330 ST. AMANT DE BOIXE
TEL. 0545/397562 FAX 0545/398820
e-mail : mecc.alte@meccalte.fr

UNITED KINGDOM
MECC ALTE U.K LTD
6 LANDS' END WAY
OAKHAM RUTLAND LE 15 6RF
TEL. 1572 / 771160 FAX 1572 / 771161
e-mail : gen@meccalte.co.uk

DEUTSCHLAND
MECC ALTE GENERATOREN GmbH
ENSENER WEG 21
D-51149 KÖLN
TEL. 0 22 03 / 50 38 10 FAX 0 22 03 / 50 37 96
e-mail : info@meccalte.de

ESPAÑA
MECC ALTE ESPAÑA S.A.
C/ RIO TAIBILLA, 2
POLIG. IND. LOS VALEROS
03178 BENIJOFAR (ALICANTE)
TEL. 096/6702152 FAX 096/6700103
e-mail : gerencia@meccalte.es

MECC ALTE S.p.A.
Via ROMA 20
36051 CREAZZO
VICENZA
ITALIA
Tel +39 0444 396111
Fax +39 0444 396166
E-Mail : info@meccalte.it

AUSTRALIA
MECC ALTE ALTERNATORS PTY LTD
10 DUNCAN ROAD, PO BOX 1046
DRY CREEK, 5094 SOUTH AUSTRALIA
TEL. +61 08/83498422 FAX +61 08/83498455
e-mail : sales@meccalte.com.au

U.S.A. AND CANADA
MECC ALTE INC.
1229 ADAMS DRIVE
MCHENRY, Il. 60051
TEL. 815/344-0530 FAX 815/344-0535
e-mail : tom.weber@meccalte.us

FAR EAST
MECC ALTE (F.E.) PTE LTD
19 KIAN TECK DRIVE
SINGAPORE 628836
TEL. +65 62 657122 FAX +65 62 653991
e-mail : enquiry@meccalte.com.sg

CHINA
MECC ALTE ALTERNATOR (HAIMEN) LTD
755 NANHAI EAST ROAD JIANGSU HAIMEN
ECONOMIC DEVELOPMENT AREA
226100 PEOPLE'S REPUBLIC OF CHINA
TEL: 86 513-82325758 FAX: 86 513-82325768
e-mail: sales@meccalte.cn

INDIA
MECC ALTE INDIA PVT LTD
PLOT No. -1,
SANASWADI - TALEGAON DHAMDHERE ROAD
TALUKA : SHIRUR, DISTRICT : PUNE - 412208
MAHARASHTRA, INDIA
TEL. +91 2137 619600 - FAX +91 2137 619699
e-mail : sales@meccalte.in

July 2011 - rev. 04 - code 9513019052

DESCRIZIONE MACCHINA

I generatori della serie S16W sono monofasi senza spazzole, di elevata affidabilità di funzionamento.
Non richiedono manutenzioni non essendoci collettori o contatti striscianti.
Sono costruiti in conformità alle direttive 2006/42, 2006/95, 2004/108 e relative modifiche, alle norme EN 60034-1, CEI 2-3, IEC 34-1, VDE 0530, BS 4999-5000, N.F. 51.111.
I coperchi sono pressofusi in lega di alluminio ad alta resistenza, l'albero è in acciaio C45 con ventola calettata.
Il grado di protezione è IP21 (a richiesta è possibile realizzare un grado di protezione superiore).
Gli isolamenti sono in classe H e gli avvolgimenti sono impregnati con resine epossidiche tropicalizzate.
La produzione di serie soddisfa la normativa VDE 0875 grado "N" ed i requisiti essenziali di sicurezza imposti dalla direttiva europea sulla compatibilità elettromagnetica; la conformità a questa ultima è garantita dall'applicazione delle norme europee EN 61000-6-3, EN61000-6-1.

PREMESSA

I generatori della serie S16W rispondono alle direttive CEE 2006/42, 2006/95, 2004/108 e relative modifiche; pertanto non presentano pericoli per l'operatore, se installati, usati, manutenuti secondo le istruzioni fornite dalla Mecc Alte e a condizione che i dispositivi di sicurezza siano tenuti in perfetta efficienza.

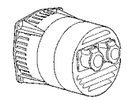

MACHINE DESCRIPTION

S16W series alternators are single-phase brushless units. Their operating is highly reliable. These units do not require maintenance since they do not have slip rings nor slipping contacts. S16W alternators are made in compliance with the 2006/42, 2006/95, 2004/108 directives and their amendments, and the EN 60034-1, CEI 2-3, IEC34-1, VDE 0530, BS 4999-5000, N.F. 51.111 regulations.
The end brackets are diecast in high resistance alluminum alloy, the shaft is in C45 steel and is fitted with a keyed fan. The mechanical protection level meets standard IP21 (upon request higher levels of protection can be supplied). The H-class insulation and windings are impregnated with tropicalized epoxy resins.
The standard generators comply with the specification VDE 0875 degree "N" and with the basic safety requirements of the European regulation on electromagnetic compatibility; by applying the European standards EN 61000-6-3, EN61000-6-1 the above mentioned regulation is complied with.

INTRODUCTION

The S16W alternators comply with the EEC 2006/42, 2006/95, 2004/108 directives and their amendments; therefore they pose no danger to the operator if they are installed, used and maintained according to the instructions given by Mecc Alte and provided that the safety devices are kept in perfect working conditions.

DESCRIPTION DE LA MACHINE

Les alternateurs de la Serie S16W sont monophasés, sans balais. Ce machines ne demandent aucun entretien particulier.
Les alternateurs S16W sont construits en conformité aux directives 2006/42, 2006/95, 2004/108 et leurs modifications, aux normes EN 60034-1, CEI 2-3, IEC 34-1, VDE 0530, BS 4999-5000, N.F. 51.111.
Les flasques sont en aluminium coulé à haute resistance, l'arbre est en acier C45 avec ventilateur claveté.
Le grade de protection est IP21 (sur demande, il est possible de réaliser un grade de protection supérieure).
Les isolements sont de classe H et les enroulements imprégnés de résines époxy tropicalisées.
La production en série est conforme à la norme VDE 0875 degré "N" et aux conditions essentielles requises de sécurité imposées par la directive européenne sur la compatibilité électromagnétique; la conformité à cette demére est garantie par l'application des normes européenne EN 61000-6-3, EN61000-6-1.

INTRODUCTION

Les alternateurs de la série S16W répondent aux directives CEE 2006/42, 2006/95, 2004/108 et leurs modifications. Toutefois, ils ne présentent aucun danger pour l'utilisateur si l'installation, l'utilisation, les manutentions suivent les instructions fournies par Mecc Alte et à condition que les dispositifs de protection soient tenus en parfait état de marche.

MASCHINEN BESCHREIBUNG

Die Generatoren der Serie S16W sind einphasing ohne Bürsten, Sie haben eine sehr hohe Funktionszuverlässigkeit, Zudem brauchen sie nicht gewartet zu werden, da sie keine Kollektoren oder Reibungskontakte aufweisen. Die Generatoren S16W sind in Ubereinstimmung mit den Bestimmungen 2006/42 sowie mit 2006/95 und 2004/108 und deren entsprechenden Änderungen, en und den Normen EN 60034-1, CEI 2-3, IEC 34-1, VDE 0530, BS 4999-5000, N.F. 51.111. Die Deckel sind aus einem sehr widerstandsfähigen Aluminiumdruckguß angefertigt, die Welle aus C45-Stahl mit aufgezogenem Lüfterrad. Die Schutzklasse ist IP21 (auf Anfrage kann auch eine hohere Schutzklasse realisiert werden). Die Isolierung entspricht Klasse H und die Wicklungen sind mit Tropen-Epoxidharz imprägniert. Die Serrienproduktion entspricht der Bestimmung VDE 0875, Grad "N" und den wesentlichen Sicherheitsanforderungender europäischen Richtilinie hinsichtlich elektromagnetischer Kompatibilität; die Übereinstimmung mit dieser Richtlinie wird durch die Anwerdung der europäischen Normen EN 61000-6-3, EN61000-6-1 gewährleistet.

VORWORT

Die Generatoren entsprechen den EG-Bestimmugen 2006/42, 2006/95, 2004/108 und deren entsprechenden Änderungen; aus diesem Grunde stellen sie keinerlei Gefahr für den Bediener dar, sofern sie in Übereinstimmung mit den von Mecc Alte vorgeschriebenen Anweisungen, installiert, verwendet und gewartet werden und unter der Bedingung, daß die Schutzvorrichtungen stets in einem voll funktionstüchtigen Zustand gehalten werden.

DESCRIPCION MAQUINA

Los generadores de la Serie S16W son de tipo monofase, sin escobillas, de elevada confiabilida de functionamiento y no tienendo colectores o contactos móviles, no requieren mantenimiento.
Los generadores S16W estàn construidos en conformidad a las directivas 2006/42, 2006/95, 2004/108 y sus modificas, normas EN 60034-1, CEI 2-3, IEC 34-1, VDE 0530, BS 4999-5000, N.F. 51.111.
Las tapas son fundidas a presiòn en una aleaciòn de aluminio de alta resistencia, el eje en acero C45 con ventilador acoplado.
El grado de proteccion es IP21 (a pedido es posible realizar un grado de proteccion superior).
Los aislamientos son de clase H y los revestimientos están impregnados de resina de epóxido tropicalizado.
La prodiccion de serie satisface la normativa VDE 0875 grado "N" y los requisitos esenciales de seguridad impuestos por la directiva europea sobre la compatibilidad electromagnética; la conformidad con esta ultima està garantizada por la aplicaciòn de las normas europeas EN 61000-6-3, EN61000-6-1.

ACLARACION

Los generadores de la serie S16W responden a las directivas CEE 2006/42, 2006/95, 2004/108 y a sus respectivas modificaciones; por lo tanto no se presentan peligros para el operador, si instalados, usados y mantenidos segùn las instrucciones dadas por la Mecc Alte y con la condiciòn que los dispositivos de seguridad sean mantenidos en una condición de perfecta eficiencia.

Per questa ragione occorre attenersi scrupolosamente alle istruzioni indicate in questo manuale.

Alla consegna del generatore controllare con la bolla di accompagnamento che non ci siano danni o parti mancanti; nel caso, informare immediatamente lo spedizioniere, l'assicurazione, il rivenditore o la Mecc Alte.

Per qualsiasi comunicazione citare sempre il tipo e il codice del generatore.

Non disperdere l'imballo nell'ambiente, ma rivolgersi alle agenzie di smaltimento.

PRESCRIZIONI DI SICUREZZA
Durante la consultazione del presente manuale d'uso e manutenzione troverete alcuni simboli; questi hanno un preciso significato qui di seguito illustrato.

IMPORTANTE
Segnala al personale interessato che l'operazione descritta presenta un rischio che può avere come conseguenza un danno alla macchina, se non effettuata nel rispetto delle normative di sicurezza.

ACCORTEZZA
Segnala al personale interessato che l'operazione descritta presenta un rischio che può avere come conseguenza un danno alla macchina e/o lesioni al personale stesso, se non effettuata nel rispetto delle normative di sicurezza.

AVVERTIMENTO
Segnala al personale interessato che l'operazione descritta presenta un rischio che può avere come conseguenza lesioni gravi o morte, se non effettuata nel rispetto delle normative di sicurezza.

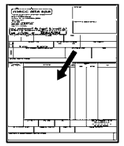

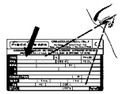

IMPORTANTE
IMPORTANT
WICHTIG

Therefore a strict observance of these instructions is required.

When the alternator is delivered, check that unit conforms with the delivery note and ensure that there are no damaged or defective parts; should there be any, please inform the forwarding agent, the insurance company the seller or Mecc Alte immediately.

Always indicate the generator type and code when contacting Mecc Alte.

Any packing materials should be disposed of via correct waste disposal methods. Do not discard waste materials into the enviroment.

SAFETY REQUIREMENTS
In consulting this use and maintenance manual, you will find several symbols, which have a specific meaning, as illustrated below.

IMPORTANT
This symbol warns the personnel concerned that the described operation may cause damages to the machine if it is not carried out according to the safety standards.

CAUTION
This symbol warns the personnel concerned that the described operation may cause damages to the machine and/or injures to the personnel if it is not carried out according to the safety standards.

WARNING
This symbol warns the personnel concerned that the described operation may cause serious injuries or death to the personnel if it is not carried out according to the safety standards.

Pour cette raison, il faut se conformer scrupuleusement aux instructions indiquées dans ce manuel.

A la livraison de l'alternateur, contrôler avec le bon de livraison qu'il n'y a aucun dommage ou de pièces manquantes; si c'est le cas, informer immédiatement l'expéditeur, l'assureur, le revendeur ou Mecc Alte.

Pour toute demande, citer toujours le type et le code de l'alternateur.

Ne pais jeter l'emballage dans la nature mais s'adresser à un centre de recyclage.

PRESCRIPTIONS DE SECURITÉ
Au cours de la consultation du présent manuel d'utilisation et d'entretien, vous trouverez des symboles dont la signification précise est expliquée ci-après.

IMPORTANT
Signe au personnel intéressé que l'operation décrite presente, une risque qu'il peut avoir comme conséquence une domage à la machine, si n'effectué pas dans le respect des normes de securité.

ADRESSE
Signe au personnel intéressé que l'operation décrite presente, une risque qu'il peut avoir comme conséquence une domage à la machine et/ou lésions graves ou mort au personnel même, si n'effectué pas dans le respect des normes de securité.

AVVERTISSEMENT
Signe au personnel intéressé que l'operationdécrite presente, une risque qu'il peut avoir comme conséquence une domage à la machine et/ou lésions graves ou mort, si n'effectué pas dans le respect des normes de securité.

Aus den oben genannten Grunden ist es erforderlich, sich streng an die in diesem Handbuch angegebenen Answeisungen zu halten.

Bei Lieferung des Generators ist anhand des Lieferscheins dieser auf Schäden, bzw. auf fehlende Teile hin zu überprüfen; in diesem Falle sind der Spediteur, die Versicherung, der Fach-händler oder Mecc Alte umgehend darüber zu informieren.

Für Mitteilungen, ist der Generatrorentyp und der Code anzugeben.

Die Verpackung ist durch die entsprechenden den Entsorgungsunternehem zu entsorgen.

SICHERHEITS VORSCHRIFTEN
Beim Lesen dieser Gebrauchs- und Wartungsanleitung finden Sie einige Symbole zu finden; diese habe eine ganz genaue Bedeutung, die im Folgenden erläutert wird.

WICHTIG
Signalisieren Sie dem zuständigen Personal, daß die beschriebene Arbeit ein Risiko darstellt, welches Schäden an der Maschine zur Folge haben kann; falls die Arbeit nicht unter voller Beachtung der Sicherheitsvorschriften erfolgt.

HINWEIS
Signalisieren Sie dem zuständigen Personal, daß die beschriebene Arbeit ein Risiko darstellt, welches Schäden an der Maschine und/oder Verletzungen des Personales selbst zur Folge haben kann; falls die Arbeit nicht unter voller Beachtung der Sicherheitsvorschriften erfolgt.

WARNHINWEIS
Signalisieren Sie dem zuständigen Personal, daß die beschriebene Arbeit ein Risiko darstellt, welches schwere Verletzungen oder sogar den Tod zur Folge haben kann, falls die Arbeit nicht unter voller Beachtung der Sicherheitsvorschriften erfolgt.

Por esta razòn es necesario adecuarse a la perfecciòn a las instrucciònes indicadas en este manual.

A la entraga del generador, controlar junto con la factura que no exisistan defectos o piezas faltantes; en caso contrario informar immediatamente la empresa de transportes, la compañia de seguros, el revendedor o la Mecc Alte.

Para cualquier tipo de comunicacion, indicar siempre el tipo y el codigo del generador.

No dejar que el embaje se pierda en el ambiente, dirigirse siempre a cualquier agencia que trate el reciclaje de residuos.

PRECAUCIONES DE SEGURIDAD
Cuando consulte este manual de uso y manutención, verá determinados símbolos con un significado presiso, el cual encontrará ilustrado a continuación.

IMPORTANTE
Signa a el personal interesado que el operation descrita presenta, une riesgo que puede hacer como consecuencia une daño a la maquina, se no efectuada en el respecto de les normatives de securidad.

AGUDEZA
Signa a el personal interesado que el operation descrita presenta, une riesgo que puede hacer como consecuencia une daño a la maquina y/ou lésiones a el personal mismo, se no efectuada en el respecto de les normatives de securidad.

ADVERTIMIENTO
Signa a el personal interesado que el operation descrita presenta, une riesgo que puede hacer como consecuencia une daño a la maquina lésiones serios o muerte, se no efectuada en el respecto de les normatives de securidad.

PERICOLO
Segnala al personale interessato che l'operazione descritta presenta un rischio immediato che ha come conseguenza lesioni gravi o morte, se non effettuata nel rispetto delle normative di sicurezza.

ADDETTO ALLA MOVIMENTAZIONE
Identifica il tipo di operatore a cui è riservato l'intervento trattato. Questa qualifica presuppone una piena conoscenza e comprensione delle informazioni contenute nel manuale d'uso del costruttore oltre che competenze specifiche dei mezzi di sollevamento, dei metodi e delle caratteristiche d'imbragatura e della movimentazione in sicurezza.

MANUTENTORE MECCANICO
Identifica il tipo di operatore a cui è riservato l'intervento trattato. Questa qualifica presuppone una piena conoscenza e comprensione delle informazioni contenute nel manuale d'uso del costruttore oltre che competenza specifica per effettuare gli interventi di installazione, regolazione, manutenzione, pulizia e/o riparazione.

MANUTENTORE ELETTRICO
Identifica il tipo di operatore a cui è riservato l'intervento trattato. Questa qualifica presuppone una piena

DANGER
This symbol warns the personnel concerned that the described operation may immediately cause serious injuries or death to the personnel if it is not carried out according to the safety standards.

HANDLER
This symbol identifies the type of operator in charge of the operation described.
This qualification requires a complete knowledge and understanding of the information contained in the manufacturer's instruction manual as well as specific skills about the hoisting means, slinging methods and features and safe handling procedures.

MECHANICAL SERVICE MAN
This symbol identifies the type of operator in charge of the operation described.
This qualification requires a complete knowledge and understanding of the information contained in the manufacturer's instruction manual as well as specific skills necessary to perform installation, adjustment, maintenance, cleaning and/or repair operations.

ELECTRICAL SERVICE MAN
This symbol identifies the type of operator in charge of the operation described. This qualification requires

DANGER
Signe au personnel interessé que l'operation décrite presente, une risque qu'il peut avoir comme conséquence lésiones graves ou mort, si n'effectué pas dans le respect des normes de securité.

PRÉPOSÉ A LA MOUVEMENTATION
Identifié le type de operateur dont il est reservé l'intervention traité. Cette qualification suppose une pleine connaisance et compréhension des renseignement contenu dans le manuel d'instruction du constructeur plus loin que compétences spécifiques de moyens du soulévement, des méthodes et des caractéristiques d'élígage et du mouvementation en sécurité.

PRÉPOSÉ MÉCANIQUE
Identifié le type de operateur dont il est reservé l'intervention traité. Cette qualification suppose une pleine connaisance et compréhension des renseignement contenu dans le manuel d'instruction du constructeur plus loin que compétences spécifiques pour effectuer les interventiones d'installation, regulation, manutention, nettoyage et/ou réparation.

PRÉPOSÉ ÉLECTRIQUE
Identifié le type de operateur dont il est reservé l'intervention traité. Cette qualification suppose une

GEFAHR
Signalisieren Sie dem zuständigen Personal, daß die beschnebene Arbelt ein Risiko darstelli, wetches schwere Verletzungen oder sogar den Tod zur Folge haben kann, falts die Arbeit nicht unter voller Beachtung der Sicherheitsvorschriften erfolgt.

TRANSPORT-BEAUFTRAGTER
Identifiziert den Personentyp, der mit dem Transport bzw. der Bewegung der Maschine beauftragt ist. Diese Qualifikation setzt eine volle Kenntnis und Verständnis der im Bedienungshandbuch des Herstellers enthaltenen Informationen voraus, zusätzlich zu den spezifischen Kompetenzen, was die Transport-und Anhebemittel, die Eigenschaften der Transportschlingen und der sicheren Bewegung betrifft.

WARTUNGSFACHMANN MECHANIK
Identifiziert den Personentyp, der mit der mechanischen Wartung beauftragt ist. Diese Qualifikation setzt eine volle Kenntnis und Verständnis der im Bedienungshandbuch des Herstellers enthaltenen Informationen voraus, zusätzlich zu den spezifischen Kompetenzen, was die Aufstellungs, Einstellungs, Wartungs, Reinigungs- und/oder Reparaturarbeiten betrifft.

WARTUNGSFACHMANN ELEKTRIK
Identifiziert den Personentyp, der mit der elektrischen Wartung beauftragt ist. Diese Qualifikation setzt eine

PELIGRO
Signa a el personal interesado que el operation descrita presenta, une riesgo que puede hacer como consecuencia une daño a la maquina lésiones serios o muerte, se no efectuada en el respecto de les normatives de securidad.

APLICADO A LA MOVIMENTATION
Identifica el tipo de operador la cual es reservado el intervenciòn tartado.
Esta calificaciòn presupone una llena conocimiento y comprensiòn des informaciònes contenidos en el manual para uso de el constructor de la parte de allà que competencia especificaciòn des medios de leventamiento, des métodos y des caracteristicas de barrachera y de movimentaciòn en securidad.

MANUTENDOR MECANICO
Identifica el tipo de operador la cual es reservado el intervenciòn tartado. Esta calificaciòn presupone una llena conocimiento y comprensiòn des informaciònes contenidos en el manual para uso de el constructor de la parte de allà que competencia especificaciòn por efectuar los intervenciònes de instalaciòn, regulaciòn, manutenciòn, limpieza y/ou reparaciòn.

MANUTENDOR ELÉCTRICO
Identifica el tipo de operador la cual es reservado el intervenciòn tartado. Esta calificaciòn presupone

conoscenza e comprensione delle informazioni contenute nel manuale d'uso del costruttore oltre che competenza specifica per gli interventi di natura elettrica di collegamento, regolazione, manutenzione e/o riparazione.

PRESCRIZIONI DI SICUREZZA
E' in grado di operare in presenza di tensione all'interno di armadi e quadri elettrici.

Nel caso di interventi straordinari e su autorizzazione scritta del servizio assistenza rivolgersi ai centri autorizzati Mecc Alte.

Prima di qualsiasi intervento sul generatore assicurarsi che il motore primario a cui è collegato non sia in funzione e che non ci siano parti in movimento.

ATTENZIONE
L'INSTALLATORE FINALE E' RESPONSABILE DELLA PREDISPOSIZIONE DI TUTTE LE PROTEZIONI (DISPOSITIVI DI SEZIONAMENTO, PROTEZIONI CONTRO I CONTATTI DIRETTI E INDIRETTI, PROTEZIONI CONTRO SOVRACORRENTI E SOVRATENSIONI, ARRESTO DI EMERGENZA, ETC.) NECESSARIE PER RENDERE CONFORME IL MACCHINARIO E L'IMPIANTO UTILIZZATORE, ALLE VIGENTI NORME DI SICUREZZA INTERNAZIONALI / EUROPEE.

a complete knowledge and understanding of the information contained in the manufacturer's instruction manual as well as specific skills necessary to perform electrical operations such as connections, adjustment, maintenance and/or repair.

SAFETY REQUIREMENTS
The electrical service man must be able to work even in case electrical cabinets and panels are live.

In case of exceptional operations and upon written request of servicing operations please apply to Mecc Alte authorized centers.

Before any cleaning, lubrication or maintenance operation, ensure that the generator is stationary and disconnected from the power supply.

CAUTION
THE FINAL INSTALLER IS RESPONSIBLE FOR THE INSTALLATION OF ALL THE PROTECTIONS (SECTIONING DEVICES, PROTECTIONS AGAINST DIRECT AND INDIRECT CONTACTS, OVERCURRENT AND OVERVOLTAGE PROTECTIONS, EMERGENCY STOP, ETC.) NECESSARY FOR THE MACHINE TO COMPLY WITH THE EXISTING INTERNATIONAL / EUROPEAN SAFETY REGULATIONS.

pleine connaisance et compréhension des renseignement contenu dans le manuel d'instruction du constructeur plus loin que compétences spécifiquede nature électrique de liaison, regulation, manutention, et/ou réparation.

PRESCRIPTIONS DE SECURITÉ
Il est en degré de agir en présence de tension à l'interieur des armoires et tableaux électriques.

En cas des interventiones extraordinaires et sur autorisation écrite du service et assistance s'addreser aux centres autorisés Mecc Alte.

Avant une quelconque intervention sur l'alternateur s'assurer que le moteur avec lequel est accouplé l'alternateur ne doit pas être en fonctionnement et qu'il n'y a aucun pièces en fonctionnement.

ATTENTION
L'INSTALLATEUR FINAL EST RESPONSABLE DE LA MISE EN PLACE DE TOUTES LES PROTECTIONS NÉCESSAIRES (DISPOSITIFS DE PROTECTION ET DE COUPURE, PROTECTIONS CONTRE LES CONTACTS DIRECTS ET INDIRECTS, PROTECTIONS CONTRE LES SURCHARGES ET LES SURTENSIONS, ARRÊT D'URGENCE ETC.), POUR RENDRE CONFORME LE MATÉRIEL ET SON IMPLANTATION AUX NORMES DE SÉCURITÉ INTERNATIONALES ET EUROPÉENNES EN VIGUEUR.

volle Kenntnis und Verständnis der im Bedienungshandbuch des Herstellers enthaltenen Informationen voraus, zusätzlich zu den spezifischen Kompetenzen, was die Eingriffe elektrischer Natur betrifft, wie: Anschlüsse, Einstellung, Wartung und/oder Reparaturen.

SICHERHEITS VORSCHRIFTEN
Er ist in der Lage, auch Arbeiten im Inneren von Schaltschränken und -tafeln auszuführen, wenn diese unter Spannung stehen.

Im Fall von außergewöhnlichen Eingriffen und auf schriftliche Bestätigung des techn. Services sich an die autorisierten Kundendienstzentren von Mecc Alte wenden.

Vor jedem Eingriff für Reinigung, Schmierung oder Wartung, muß der Hauptmotor, an den der Generator angeschlossen ist, außer Betrieb gesetzt werden; er muß stillstehen und von seinen Energiequellen isoliert werden.

ACHTUNG
DER ENDMONTEUR IST VERANTWORTLICH FÜR DIE VOREINSTELLUNG UND VORBEREITUNG ALLER SCHUTZVORRICHTUNGEN (TRENNVORRICHTUNGEN, SCHUTZVORRICHTUNGEN GEGEN DIREKT-UND INDIREKTKONTAKT, SCHUTZVORRICHTUNGEN GEGEN ÜBERSTROM UND ÜBERSPANNUNG, NOTAUS, ETC.), DIE MASCHINE UND DIE ANLAGE DES ANWENDERS AN DIE GÜLTIGEN INTERNATIONALEN UND EUROPÄISCHEN SICHERHEITSVORSCHRIFTEN ANZUPASSEN.

una llena conocimiento y comprensiòn des informaciònes contenidos en el manual para uso de el constructor de la parte de allà que competencia especificaciòn por efectuar los intervenciònes de natura electrica de coligamiento, regulaciòn, manutenciòn, y/ou reparaciòn.

PRECAUCIONES DE SEGURIDAD
Es en grado de trabajar en presencia de tension a los interno des armarios y cuadros electricos.

En caso de intervenciçnes extraordinarios y su autorizaciòn escritura du servicio assistencia revolverse a los centros autorizado Mecc Alte.

Antes de cualquier tipo de operaciòn sobre el generador, el motor primario al cual està acoplado no sea en funcionamiento y que no existan piezas faltantes en movimiento.

ATENCION
EL INSTALADOR FINAL ES RESPONSABLE DEL MONTAJE DE TODAS LAS PROTECCIONES (DISPOSITIVOS DE SECCIONAMIENTO, PROTECCIONES CONTRA CONTACTOS DIRECTOS E INDIRECTOS, PROTECCIONES CONTRA SOBRECORRIENTE Y SOBRETENSION, PARADA DE EMERGENCIA, ETC.), NECESARIAS PARA PRODUCIR LA CONFORMIDAD DE LAS MAQUINAS Y LA INSTALACION CON LAS NORMAS VIGENTES DE SEGURIDAD INTERNACIONALES Y EUROPEAS.

Per questa ragione assicurarsi che l'impianto di messa a terra sia efficiente ed in conformità con le direttive del paese dove il generatore sarà installato.

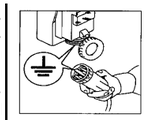

Per il collegamento a terra è prevista anche la possibilità di utilizzare un foro presente sul coperchio posteriore, che è accessibile senza dover smontare la cuffia.

Le persone addette alla movimentazione devono sempre indossare guanti da lavoro e scarpe antinfortunistiche. Qualora il generatore o l'intero impianto debba essere sollevato da terra, gli operatori devono usare un casco protettivo.

In caso di immagazzinamento, gli alternatori imballati e non, devono essere depositati in un locale fresco e asciutto o comunque mai esposto alle intemperie.

IMPORTANTE !
QUALORA IL GENERATORE SIA STATO A LUNGO IMMAGAZZINATO, PER EVITARE DANNI DOVUTI ALL'UMIDITA', E' CONSIGLIABILE VERIFICARE LA RESISTENZA D' ISOLAMENTO DI TUTTI GLI AVVOLGIMENTI VERSO MASSA, ROTORE COMPRESO.
I VALORI RILEVATI DEVONO ESSERE SUPERIORI AD 1 MΩ (EN60204-1). IN CASO CONTRARIO, BISOGNA INVESTIRE GLI AVVOLGIMENTI CON UN GETTO D'ARIA CALDA FINO A CHE NON SI OTTENGA IL VALORE SOPRARIPORTATO.

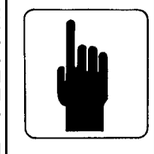

This is the reason why you must make sure that the grounding system is in good conditions and in compliance with the regulations of the country where the generator will be installed.

For ground connection, the end bracket is provided with a hole that can be used without necessarily removing the end cover.

The people in charge of the handling must always wear work gloves and safety shoes. In case the generator or the whole plant must be lifted from the floor, the operators must wear a safety helmet.

In case of storing, both packed and unpacked alternators shall be stored in a cool and dry room, and shall never be exposed to bad weather.

IMPORTANT !
IN CASE THE ALTERNATOR HAS BEEN STORED FOR A LONG TIME AND IN ORDER TO AVOID DAMAGES CAUSED BY HUMIDITY, WE SUGGEST THAT THE INSULATION RESISTANCE OF ALL WINDINGS TO GROUND BE CHECKED INCLUDING THE ROTOR. THE RESULTING DATA MUST BE HIGHER THAN 1 MΩ (EN60204-1). IF DATA ARE NOT HIGHER THAN SAID VALUE, BLOW WARM AIR OVER THE WINDINGS TILL THE ABOVE MENTIONED VALUE IS OBTAINED.

Pour cette raison, s' assurer que l'installation de mise à la terre fonctionne bien et soit en conformité avec les directives du pays ou le générateur sera installé.

Pour le raccordement à la masse il est prévu sur la partie supérieure un trou accessible sans avoir à dèmonter le couvercle.

Les personnes employées à la manutention doivent avoir des gants et des chaussures de sécurité. Dans le cas ou l'alternateur ou le groupe électrogène doivent être soulevé de terre, les opérateurs doivent utiliser un casque de protection.

En cas de stockage, les alternateurs emballés ou non, doivent être déposés dans un local frais et aéré et jamais exposés aux intempéries.

IMPORTANT !
AU CAS OU LES ALTERNATEURS AURAIENT SÉJOURNÉS LONGUEMENT EN MAGASIN IL EST CONSÉILLÉ DE CONTROLER LES RÉSISTANCE D'ISOLEMENT DE TOUS LES ENROULEMENTS Á LA MASSE Y COMPRIS LE ROTOR. LA VALEUR RELEVÉE DOIT ÉTRE SUPÉRIEUR Á 1 MΩ (EN60204-1). DANS LE CAS CONTRAIRE IL EST NÉCESSAIRE DE RÉCHAUFFER LES BOBINAGES EN INSUFLANT DE L'AIR CHAUD.

Aus diesem Grunde ist es erforderlich sicherzustellen, daß die Erdungsanlage leistungsfähig ist und mit den Vorschriften des Landes, in dem der Generator installiert wird, übereinstimmt.

Hinsichtlich der Erdung ist auf der oberen Seite des hinteren Deckels ein zugängliches Loch vorgesehen, so daß die Haube nicht abgenommen werden muß.

Die für den Transport zuständigen Personen haben stets Arbeitshandschuhe und Schuhwerk gemäß den Unfallverhütungsvorschriften zu tragen. Sofern der Generator oder die gesamte Anlage vom Boden angehoben werden müssen, haben die Arbeiter einen Schutzelm zu verwenden.

Die Lagerung von verpackten und unverpackten Generatoren muß in einem kühlen und trockenen Raum erfolgen, der keinesfalls Witterungs seinflüssen ausgesetz ist.

WICHTIG !
WENN DER GENERATOR ÜBER EINEN LÄNGEREN ZEITRAUM HINWEG EINGELAGERT WORDEN WAR; UM IHN VOR FEUCHTIGKEIT ZU SCHÜTZEN, EMPFIEHLT ES SICH DEN ISOLATIONSWIDERSTAND ALLER WICKLUNGEN GEGEN MASSE, EINSCHLIEßLICH LÄUFER, ZU ÜBERPRÜFEN.
DIE GEMESSENEN WERTE MÜSSEN ÜBER 1MΩ (EN60204-1)LIEGEN.

Por lo tanto es necesario que la instalación de puesta a tierra sea eficiente y en conformidad con las directivas del país donde el generador será montado.

Para la conexiòn a masa se provee sobre la parte superior de la tapa posterior un orificio accessible, sin tener que desmontar la copertura.

Las personas dedicadas al transporte deberán usar siempre guantes de trabajo y zapatos de seguridad. Siempre que el generador o el equipo completo sea elevado del suelo, los operadores deberán usar cascos de protección.

En caso de depósito, los alternadores con o sin embalaje, deberán ser puestos en un lugar fresco y seco o por lo menos nunca ser expuestos a la intemperie.

IMPORTANTE !
SI ACASO EL GENERADOR HAYA ESTADO DEPOSITADO UN LARGO PERIODO DE TIEMPO, PARA EVITAR DANOS DEBIDO A LA HUMEDAD, SE ACONSEJA VERIFICAR LA RESISTENCIA DE AISLACIÓN DE TODOS LOS BOBINADOS CON RESPECTO A MASA, INCLUIDO EL ROTOR. LOS VALORES MEDIDOS DEBEN SER SUPERIORES A 1MΩ (EN60204-1) EN CASO CONTRARIO, SE DEBE APLICAR UNA RÁFAGA DE AIRE CALIENTE A LOS BOBINADOS HASTA QUE SE OBTENGA EL VALOR ANTES MENCIONADO.

Il generatore va installato in un ambiente aerato. Se non c'è sufficiente aria oltre al mal funzionamento esiste pericolo di surriscaldamento.		The generator must be installed in an airy room. If there is not enough air, a malfunction or an overheating may occur.	L'alternateur doit être installé dans un endroit aéré. Si la quantité d'air n'est pas suffisante, outre un mauvais, fonctionnement, il existe aussi un risque de surchauffe.	Der Generator muß in einem belüfteten Raum installiert werden. Wenn keine ausreichende Belüftung gegeben ist, besteht die Gefahr fehlerhaften Funktionierens und der Überhitzung.	El generador debe ser instalado en un ambiente aireado. Si no hay suficiente ventilación, además del mal funcionamiento existirá el peligro de sobrecalentamiento.
E' responsabilità dell'installatore il corretto accoppiamento del generatore al motore, mettendo in atto tutti quegli accorgimenti necessari per garantire il corretto funzionamento del generatore ed evitare anomale sollecitazioni che possono danneggiare il generatore (come vibrazioni, disallineamenti, strane sollecitazioni etc).	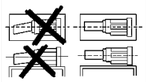	The installer is responsible for the correct coupling of the generator to the engine and for the performance of all precautions necessary to guarantee the correct operation of the generator and avoid abnormal stress, which could damage the generator (such as vibrations, misalignment, strange noises or vibrations, etc.)	L'installateur est responsable du couplage correct du générateur au moteur, par la mise en place des moyens nécessaires pour garantir le bon fonctionnement du générateur et éviter des sollicitations anormales qui pourraient endommager le générateur (comme les vibrations, les désalignements, sollicitations anormales, etc.).	Es liegt in der Verantwortung des Installateurs den Generator korrekt mit dem Motor zu verbinden und alle notwendigen Maßnahmen umzusetzen, die den richtigen Betrieb des Generators garantieren und Belastungen vermeiden, die den Generator beschädigen könnten (wie Vibrationen, Abweichungen, sonderbare Beanspruchungen etc.).	Es responsabilidad de instalador la correcta conexión entre el generador y el motor, mediante el uso de todas las medidas de seguridad necesarias que garanticen el correcto funcionamiento del generaror y que eviten sobrecargas que puedan dañarlo (x.e. vibraciones, desajustes, conexiones irregulares, etc...)
Ricordarsi che, una volta accoppiato il generatore al motore primario, e montato su un basamento, dovrà essere sollevato seguendo le indicazioni dell'installatore.		Once the generator is coupled with the prime mover and mounted on a baseframe, the relevant instructions for lifting the complete generator set should be followed.	Se rappeler qu'une fois l'alternateur accouplé au moteur d'entrainement, ou monté sur socle, il devra être soulevé suivent les indications de l'installateur.	Der Aufsteller muß die Maschine genau auf der Mittellinie mit dem Haupmotor anschließen; andernfalls kann die Konstruktion gefährliche Schwingungen auslösen.	Recordar que, una vez que el generador serà acoplado al motor primario, o montado en su base deberà ser elevado seguiendo las indicaciones del instalador.
La macchina è stata progettata per garantire la potenza nominale in ambienti con temperatura massima di 40 °C e altitudine inferiore ai 1000 metri (EN60034-1), se non diversamente indicato. Per condizioni diverse vedere il catalogo commerciale (depliant).	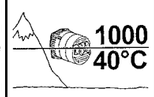	The machine was designed to guarantee the nominal power in environments with a maximum temperature of 40° C, at altitudes lower than 1000 m asl (EN60034-1), unless otherwise specified; for different operating conditions, see the commercial catalogue (brochure).	La machine a été conçue afin de garantir la puissance nominale dans des lieux ayant une température maxima de 40 °C et à une altitude inférieure à 1000 mètres (EN60034-1), sauf indication différente ; pour des conditions différentes, consulter le catalogue commercial (dépliant).	Das Gerät wurde entwickelt, um die Nennleistung in Ambienten mit einer maximalen Temperatur von 40 °C und einer Höhe unter 1000 Meter (EN60034-1) zu garantieren, wenn nicht anders angegeben; bei anderen Bedingungen bitte im Handelskatalog (Prospekt) nachschlagen.	El mecanismo ha sido diseñado para garantizar la potencia nominal en ambientes con una temperatura máxima de 40° C, y en altitud inferior a 1000 metros (EN60034-1), salvo indicaciones distintas; para conocer condiciones diferentes de las indicadas, vea el catálogo comercial (folleto).
I generatori non devono mai e per nessuna ragione funzionare con le protezioni rimosse.		The generator must never be operated with the protective devices removed.	Les générateurs ne doivent jamais et pour aucune raison fonctionner si les protections ont été enlevées.	Die Generatoren dürfen unter keinen Umständen ohne Schutzelemente in Betrieb genommen werden.	Bajo ningún motivo ni por ninguna razón, los generadores deben ser utlizados con las protecciones retiradas.
I generatori sviluppano calore anche elevato in funzione della potenza generata. Pertanto non toccare il generatore se non con guanti antiscottatura e attendere, una volta spento, che esso raggiunga la temperatura ambiente.	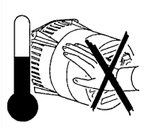	The heat produced by the generators may be very high according to the power generated. Therefore, do not touch the generator if you do not wear anti-scorch gloves and, after switching it off, do not touch it until it has cooled down to ambient temperature.	Les alternateurs produisent de l'énergie calorifique directement proportionnelle à la puissance utilisée. Ainsi, ne pas toucher l'alternateur ou bien avec des gants appropriés, et attendre que celui-ci une fois arrêté soit de nouveau à la température ambiante.	Die Generatoren entwickeln Wärme auch in erhöhtem Maße, jeweils in Abhängigkeit von der erzeugten Leistung. Aus diesem Grunde ist die Maschine nur mit Verbrennungsschutzhandschuhen zu berühren. Ist die Maschine ausgeschaltet, ist abzuwarten, daß diese wieder Umgebungstemperatur annimmt.	Los generadores producen calor, y el mismo puede ser elevado en función de la potencia generada, por lo tanto no tocar la máquina si no se posee guantes antiquemaduras, después de un tiempo de haber detenido el generador, hasta que el mismo alcance la temperatura ambiente.

PERICOLO DI CORTO CIRCUITO Il generatore è costruito con grado di protezione IP21; pertanto è fatto divieto di utilizzare qualsiasi tipo di idropulitrice e di spruzzare liquidi sopra le parti elettriche.		**DANGER OF SHORT CIRCUIT** The degree of protection of the generator is IP21; therefore it is made prohibition to use whichever type of hydrocleaner and to spray liquids over the parts containing electrical components.	**DANGER DE COURT-CIRCUIT** L'alternateur est construit avec un grade de protection IP21; donc on lui fait à prohibition pour utiliser n'importe quel type de hydroébarbeuse et pour pulvériser des liquides sur les parties électriques.	**GEFAHR VON KURZSCHLÜSSEN** Der Generator ist mit einem Schutzgrad IP21 konstruiert; folglich ist es verboten die elektrischen Teile zu bespritzen und Behälter mit Flüssigkeiten auf diese zu stellen.	**PELIGRO DE CORTO CIRCUITO** El generador está construido con grado de protección IP21; por lo tanto se hace prohibición para utilizar cualquier tipo de hydrocleaner y rociar líquidos concluído sobre las piezas eléctricos.
Non pulire con aria compressa le parti elettriche interne, poichè possono verificarsi corto circuiti o altre anomalie.		Do not clean the inside electric components with compressed air, because this may cause short-circuits or oher anomalies.	Ne pas nettoyer avec l'air comprimé les parties electriques internes, car l'on pourrait provoquer un court-circuit ou autres anomalies.	Die innenliegenden Elektroteile niemals mit Pressluft reinigen, da sich Kurzschlüsse oder andere Störungen daraus ergeben könnten.	No limpiar con aire comprimido las partes electricas internas, debido a la posibilidad de causar cortocircuitos o cualquier otro tipo de problema.
Nelle vicinanze della macchina non ci devono essere persone con indumenti svolazzanti tipo sciarpe, foulard, bracciali, ecc, e qualsiasi indumento deve essere chiuso con elastici alle estremità.	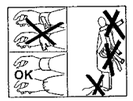	No person must wear fluttering clothes (such as scarves, bracelets etc.) near the machine and any garment must be fastened with elastic bands at its ends.	Dans le voisinage de la machine, il ne doit y avoir aucune personne portant des vêtements flottants type écharpe, foulard, ect., quelque soit le vêtement, il doit être fermé avec un élastique à l'extrémité.	In der Nähe der Maschinen dürfen sich keine Personen aufhalten, die nicht anliegende Kleidungsoder Schmuckstücke tragen (wie z.B. Schals, Tücher, Armbänder, usw.). Jedes Kleidungsstück muß an den Gelenken durch Gummis geschlossen werden.	En próximidades de la máquina no deberá haber personas con indumentaria volante como pulseras, bufandas, etc. Qualquier otro tipo de indumentaria deberá ser fijada con elásticos en las extremidades.
Per nessuna ragione appoggiarsi o sedersi sul generatore.		Do not lean or sit on the generator for whatever reason.	Pour aucune raison, il ne faut s'appuyer ou s'asseoir sur l'alternateur.	Aus keinem Grunde darf man sich an den Generator lehnen oder sich auf ihn setzen.	Por ninguna razón apoyarse o sentarse sobre el generador.
Anche se la macchina è protetta in tutte le sue parti evitare di sostare nelle sue vicinanze.		Keep away from the machine even if all the machine components are protected.	La machine est protégée dans tout son environnement, éviter de rester dans son voisinage.	Auch wenn die Maschine vollständig abgesichert ist, ist der Aufenthalt in ihrer Nähe zu vermeiden.	Si bien la máquina está protegida en todas sus partes, evitar de pararse cerca de la misma.
Non togliere per nessuna ragione le etichette, anzi richiederne la sostituzione in caso di necessità.		Do not remove the labels for whatever reason; on the contrary, replace them if necessary.	Ne pas arracher non plus les étiquettes ou adhésifs, au contraire, les réclamer en cas de nécessité.	Aus keinem Grunde sind die Etiketten zu entfernen, stattdessen ist bei Bedarf Ersatz anzufordern.	No quitar por ninguna razón las etiquetas, por el contrario, pedir la sustitución en caso de necesidad.
Alla fine del periodo di vita della macchina, rivolgersi alle agenzie di smaltimento materiali ferrosi e non disperderne parti nell'ambiente.		When the machine is worn out, contact the companies in charge of the disposal of ferrous material and do not throw away its parts into the environment.	A la fin de la période de vie de la machine, s'adresser aux organismes de recyclage du matériel concerné.	Am Ende der Lebendsdauer der Maschinen hat man sich an die Entsorgungsunternehmen für Eisenmaterialen zu wenden; Teile dürfen nicht einfach weggeworfen werden.	Al final del periodo de vida útil de la máquina, dirigirse a una agencia de reciclaje de materiales ferrosos, de manera de no perder partes en el ambiente.
In caso di sostituzione di pezzi di ricambio richiedere esclusivamente ricambi originali.		In case of replacement of spare parts, use original spare parts only.	En cas de changement de tout composant, il est indispensable de les remplacer par les pièces d'origine .	Müssen Teile ausgewechselt werden, sind ausschließlich original Ersatzteile anzufordern.	En caso de sustitución de partes de repuesto, exigir exclusivamente repuestos originales.

ACCOPPIAMENTO MECCANICO

Montare la flangia sul motore fissandola con le apposite viti M8 applicando una coppia di serraggio di 21 ± 7% Nm (fig.1).

Fissare il corpo macchina sulla flangia con le apposite viti M8 applicando una coppia di serraggio pari a 21 ± 7% Nm (fig. 2).

Inserire il tirante centrale nella sua sede (fig. 3).

Bloccare il tirante centrale applicando sul dado M8 una coppia di serraggio pari a 21 ± 7% Nm; chiudere il foro sulla cuffia con l'apposito tappo (fig. 4).

MECHANICAL COUPLING

Couple flange to engine, fixing it with the appropriate M8 screws and applying a tightening torque of 21±7% Nm (fig. 1).

Secure the alternator to the flange with proper M8 screws applying a tightening torque of 21 ± 7% Nm (fig. 2).

Insert the central bolt into its housing (fig. 3).

Lock the central bolt by appliyng a tightening torque of 21±7% Nm; plug the hole on the terminal box lid with the proper cap (fig. 4).

ACCOUPLEMENT MECANIQUE

Monter le flasque sur le moteur en le fixant avec les vis prévus M8 en appliquant un couple de serrage de 21±7% Nm (fig. 1).

Fixer le corps de la machine au flasque avec les vis M8 en appliquant un couple de serrage de 21±7% Nm (fig. 2).

Enfiler le tirante central dans son logement (fig. 3).

Bloquer la tige centrale en appliquant un couple de serrage de 21±7% Nm et fermer le trou du couvercle avec le bouchon approprié (fig. 4).

MECHANISCHER ANSCHLUß

Den Flansch am Antriebsmotor mit den passenden Schrauben M8 befestigen, und mit einem Drehmoment von 21±7% Nm festziehen (abb. 1).

Den Generator auf den Flansch mit den passenden Muttern und Schrauben M8 befestigen und mit einem Drehmoment von 21±7% Nm festziehen (abb. 2).

Die selbstsichernde Mutter auf die Zugstange schrauben (abb. 3).

Die Zugstange einsetzen und mittels Drehmomentschlüssel bis 21±7% Nm festziehen. Anschliessend die Öffnung mit der Schutzkappe verschliessen (abb. 4).

ACOPLAMIENTO MECANICO

Montar la brida sobre el motor sujetàndola con sus tornillos M8 y aplicando un par de torque de 21±7% Nm (fig.1).

Fijar el cuerpo de la màquina a la brida con los tornillos M8 y aplicando un par de torque de 21±7% Nm (fig. 2).

Introducir el tirante central en su lugar (fig. 3).

Isujete el tirante central aplicando en la tuerca M8 un par de torque de 21±7% Nm; cerrar el orificio de la tapa con el tapón respectivo (fig. 4).

Fig. 1

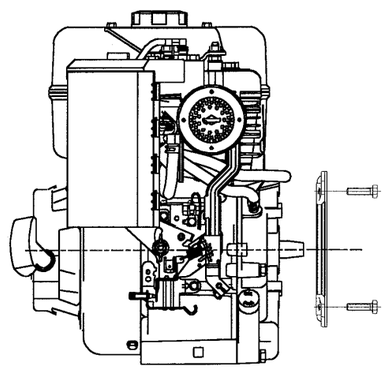

Fig. 2

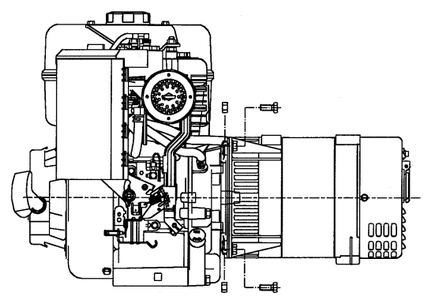

Fig. 3

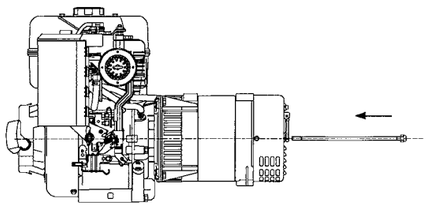

Fig. 4

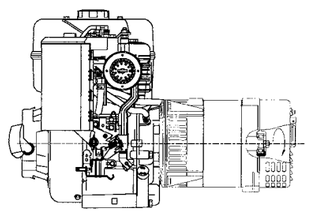

MESSA IN SERVIZIO

Nella messa in servizio, aver cura che le aperture di aspirazione e scarico dell'aria di raffreddamento siano sempre libere.

Per il collegamento elettrico alle prese o all'eventuale quadretto del generatore, utilizzare spine e cavi adeguati.

I M P O R T A N Z A DELLA VELOCITA'

La frequenza e la tensione dipendono direttamente dalla velocità di rotazione; è perciò necessario che sia mantenuta il più possibile costante al suo valore nominale con qualsiasi carico. Il sistema di regolazione della velocità dei motori di trascinamento presenta in generale una leggera caduta di velocità tra vuoto e carico; è perciò raccomandabile regolare la velocità a vuoto di un 3÷4% superiore alla velocità nominale, per avere a pieno carico il valore nominale.

Nel caso in cui il generatore non si autoeccitasse, occorrerà rieccitarlo applicando, per alcuni istanti, ai capi del condensatore una tensione alternata di circa 50÷230V.

IMPORTANTE
IMPORTANT
WICHTIG

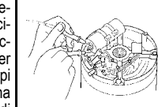

START UP

Make sure, when starting the machine, that cooling air intake and discharge openings are free and unblocked.

Always use proper plugs and cables to performe the electrical connections to the sockets or to the alternator panel.

THE IMPORTANCE OF SPEED

Frequency and voltage depend directly on rotational speed.
Its nominal value must therefore be kept as constant as possible, no matter what the load is.
Drive-motor speed control system generally have a small drop in speed between no-load and load conditions.
It is therefore recommended to adjust the speed in no-load conditions approx. 3÷4% higher than the nominal speed.

If the generator does not self-excite, it should be excited by applying an alternating voltage of around 50÷230V to the capacitor heads for an instant.

MISE EN SERVICE

S'assurrer que les couvercles de ventilation ne sont pas obstruées.

Pour les raccordements électriques aux prises ou à l'eventuel boite de l'alternateur, utiliser prises et cables adéquates.

IMPORTANCE DE LA VITESSE

La fréquence et la tension dépendent de la vitesse de rotation.
Celle-ci doit étre maintenue la plus constante possible, quelquesoit la charge.
Géneralment le systéme de régulation des moteurs thermiques est tel qu'il y a une différence de vitesse entre vide et charge.
Nous recommandons de régler la vitesse à vide à 3 ou 4 % dessus de la vitesse nominale, pour avoir à pleine charge la vitesse nominale.

Au cas où le générateur ne s'exciterait pas automatiquement, il faudrait le réexciter en appliquant une tension alternée d'environ 50÷230V pendant quelques instants aux extrémités du condensateur.

INBETRIEBNAHME

Bei der Inbetriebnahme ist zu gewährleisten, dass die Öffnungen für die Ansaugung bzw. für den Austritt der kühlluft immer frei bleiben.

Für den elektrischen Anschluß an die Dosen oder an die eventuelle Schalttafel des Generators geeignete Stecker und Kabel verwenden.

DIE WICHTIGKEIT DER DREHZAHL

Die Frequenz und die Spannung sind direkt von der Drehzal abhänging, daher ist es wichtig, daß sie so konstant wie möglich auf ihrem Nominalwert gehalten werden, unabhänging von jeglicher Last.
Generell weist das Regelsystem der Antriebsmotoren einen leichten Abfall der Geschwindigkei bei Last gegenüber Leerl auf; daher ist es ratsam, die Geschwindigkeit bei Leerlauf 3-4% höher zu stellen, als die Nominalgeschwindigkeit.

Im Falle dass der Generator sich nicht von selbst auflaedt, so ist dieser fuer einige Augenblicke durch eine Wechselstromspannung von ca. 50÷230V an den Enden des Kondensators wiederaufzuladen.

PUESTA IN SERVICIO

En la puesta in servicio asegurarse que las aberturas de aspiracion y descarga del aire de refrigeracion se encuentren siempre libres de obstaculos.

Por las conexiones eléctricas a los spines a caja de generador utilizare spine y cables adequadi.

IMPORTANCIA DE LA VELOCIDAD

La frecuencia y la tension dependen de la velocidad de rotacion.
Esta debe ser mantenida lo mas constante posible en su valor nominal sea cual sea.
Generalmente el sistema de regulacion de los motores termicos es tal que existe una diferencia de velocidad entre vacio y carga.
Recomendamos regular la velocidad sin carga a un 3÷4 % por encima de la velocidad nominal, por hacer a pieno carga la velocidad.

Caso el generador no se auto-excite, deberá ser reexcitado aplicando, por algunos instantes, en los extremos del condensador, una tensión alternada de aproximadamente 50 ÷ 230V.

INCONVENIENTI / PROBLEMS / PANNES STÖRUNG / FALLOS	CAUSE / CAUSES / CAUSES URSACHE / CAUSAS	COME INTERVENIRE / REMEDIES / QUE FAIRE / GEGEN-MAßNAHMEN / REMEDIOS
IL GENERATORE NON SI ECCITA	**Velocità ridotta** **Condensatore guasto** **Guasto negli avvolgimenti**	**Controllare i giri e portarli al valore nominale** **Controllare e sostituire** **Controllare la resistenza degli avvolgimenti**
ALTERNATOR EXCITATION FAILURE	Loow speed Faulty condenser Faulty windings	Check speed and set at nominal value Check and replace Check windings resistance
L'ALTERNATEUR NE S'AMORGE PAS	Vitesse moteur trop basse Condensateur detruit Bobinage deffectueux	Vérifier la vitesse moteur Changer le condensateur Vérifier les valeurs
GENERATOR ERREGT SICH NICHT	Reduzierte Geschwindigkeit Defekter Kondensator Defekt an den Wicklungen	Die Drehzahl überprüfen und sie auf ihren Nominalwert bringen Überprüfen und Ersetzen Den Widerstand der Wicklungen kontrollieren
EL ALTERNADOR NO SE EXCITA	Velocidad del motor demasiado baja Condensador destruido Bobinado defectuoso	Verificar la velocidad del motor Cambiar el condensador Verificar los valores

TENSIONE ALTA A VUOTO	**Velocità eccessiva** **Condensatore con capacità elevata**	**Controllare i giri e regolare** **Controllare e sostituire**
HIGH NO-LOAD VOLTAGE	Excessive speed High capacity of condenser	Check and adjust speed Check and replace
TENSION TROP HAUTE	Vitesse excessive Condensateur a capacitè trop importante	Contrôler la vitesse Contrôler la capacitè
HOHE SPANNUNG BEI LEERLAUF	Überhöhte Geschwindigkeit Kondensator mit hoher Kapazität	Die Drehzahl überprüfen und regulieren Überprüfen und ersetzen
TENSIÓN DEMASIADO ALTA SIN CARGA	Velocidad excesiva Condensador de capacidad demasiado alta	Controlar la velocidad Controlar la capacidad
TENSIONE BASSA A VUOTO	**Velocità ridotta** **Diodi rotanti guasti** **Avvolgimenti usurati** **Condensatore con capacità ridotta**	**Controllare i giri e regolare** **Controllare e sostituire** **Controllare la resistenza degli avvolgimenti** **Controllare e sostituire**
LOW NO-LOAD VOLTAGE	Low speed Faulty rotary diodes Worn windings Low capacity of condenser	Check and adjust speed Check and replace Check winding resistance Check and replace
TENSION TROP BASSE À VIDE	Vitesse trop basse Diodes détruites Bobinage détruit Condensateur mal dimensionné	Contrôler la vitesse Les changer Vérifier et changer Vérifier et changer
NIEDRIGE SPANNUNG BEI LEERLAUF	Reduzierte Geschwindigkeit Defekt an den rotierenden Dioden Fehlerhafte Wicklungen Kondensator mit reduzierter Kapazität	Die Drehzahl überprüfen und regulieren Überprüfen und ersetzen Den Widerstand der Wicklungen kontrollieren Überprüfen und ersetzen
TENSIÓN DEMASIADO BAJA SIN CARGA	Velocidad demasiado baja Diodos destruidos Bobinado destruido Condensador de capacidad demasiado baja	Controlar la velocidad Cambiarlos Verificar y cambiar Verificar y cambiar
TENSIONE ESATTA A VUOTO MA BASSA A CARICO	**Velocità ridotta a carico** **Carico troppo elevato** **Diodi rotanti in corto**	**Controllare i giri e regolare** **Controllare ed intervenire** **Controllare e sostituire**
PROPER NO-LOAD BUT LOW LOADED VOLTAGE	Low speed in loaded conditions Excessive load Short-circuited rotary diodes	Check and adjust RPMs Check and repair Check and replace
TENSION CORRECTE À VIDE, MAIS BASSE EN CHARGE	Vitesse trop basse en charge Charge trop importante Diode en court-circuit	Contrôler la vitesse Contrôler la charge Contrôler et changer
EXAKTE SPANNUNG BEI LEERLAUF JEDOCH NIEDRIGE BEI LAST	Reduzierte Geschwindigkeit bei Last Zu hohe Last Rotierende Dioden im kurzschluss	Die Umdrehungen überprüfen und regulieren Überprüfen und eingreifen Überprüfen und ersetzen
TENSIÓN CORRECTA EN VACIO PERO BAJA EN CARGA	Velocidad demasiado baja en carga Carga demasiado elevada Diodo en cortocircuito	Controlar la velocidad Controlar la carga Controlar y cambiar
TENSIONE ESATTA A VUOTO MA ALTA A CARICO	**Velocità elevata a carico**	**Controllare i giri e regolare**
PROPER VOLTAGE IN NO-LOAD CONDITIONS BUT HIGH VOLTAGE AT LOAD	High speed in loaded conditions	Check and adjust speed
TENSION CORRECTE À VIDE, MAIS HAUTE EN CHARGE	Vitesse en charge trop élevée	Contrôler la vitesse
EXAKTE SPANNUNG BEI LEERLAUF JEDOCH HOHE BEI LAST	Erhöhte Geschwidigkeit bei Last	Die Umdrehungeng überprüfen und regulieren
TENSIÓN CORRECTA EN VACIO PERO ALTA EN CARGA	Velocidad en carga demasiado elevada	Controlar la velocidad
TENSIONE INSTABILE	**Contatti incerti** **Irregolarità di rotazione**	**Controllare le connessioni** **Verificare l'uniformità di rotazione**
UNSTABLE VOLTAGE	Loose contacts Uneven rotation	Check connections Check for uniform rotation speed
TENSION INSTABLE	Mauvais contacts Irrégularité de vitesse	Vérifier les contacts Vérifier la regulation moteur
SCHWANKENDE SPANNUNG	Unsichere Kontakte Ungleichmäßige Rotation	Die Anschlüsse überprüfen Die Gleichmäßigkeit der Rotation überprüfen
TENSIÓN INESTABLE	Malos contactos Irregularidad de velocidad	Verificar los contactos Verificar la regulación del motor
GENERATORE RUMOROSO	**Cuscinetti usurati** **Accoppiamento difettoso**	**Sostituire** **Verificare e riparare**
NOISY GENERATOR	Worn bearings Faulty coupling	Replace Check and repair
ALTERNATEUR BRUYANT	Roulement défectueux Accouplement défecteux	Le changer Le vérifier
GERÄUSCHE AM GENERATOR	Defekte Lager Falsche Kupplung	Ersetzen Überprüfen und reparieren
ALTERNADOR RUIDOSO	Rodamiento defectuoso Acoplamiento defectoso	Cambiarlo Verificarlo

DIMENSIONI DI INGOMBRO / OVERALL DIMENSIONS / ENCOMBREMENT BAUMASSE / DIMENSIONES MAXIMAS

dimensions in mm.

FORMA / FORM / FORME B9

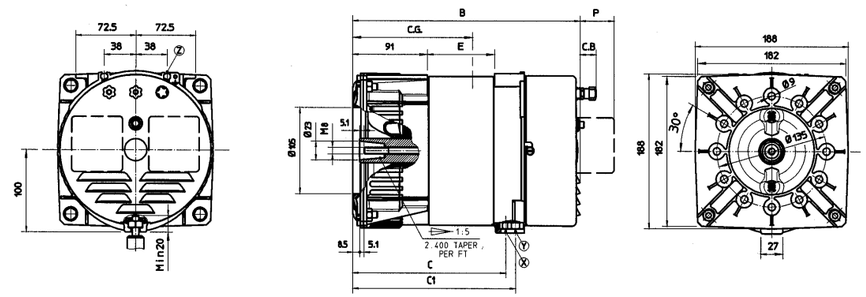

FORMA / FORM / FORME J609a

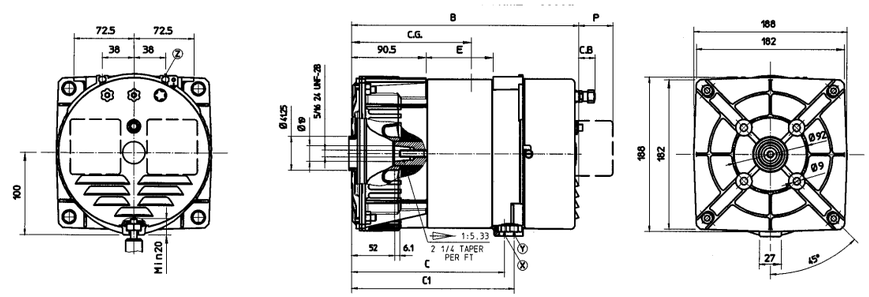

FORMA / FORM / FORME J609b

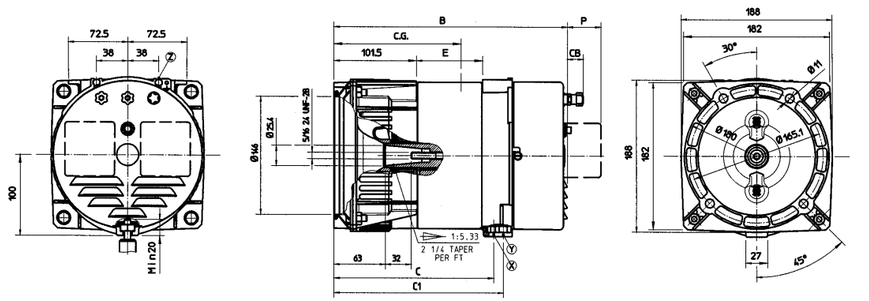

X DADO-NUT-ECROU-MUTTER-TUERCA UNI 5587-M8 15Nm 5/16X24 ANSI B18.2.2	**Y** DADO-NUT-ECROU-MUTTER-TUERCA UNI 5588-M10 25Nm	**Z** SEDE DADO UNI 5588-M5 SEAT OF NUT UNI 5588-M5 SIEGE ECROU UNI 5588-M5 MUTTERSITZ UNI 5588-M5 ESPACIO TUERCA UNI 5588-M5

FORMA FORM FORME	TIPO TYPE TYP	B	C	C1	E	B con cuffia ribassata senza prese with shorter end cover without sockets avec couvercle à epaisseur reduite sans prises mit abgeflachten deckel ohne steckdosen con tapa recortada sin enchufes	C.G.
B9	S16W-75	279	186	198	82	249	140
	S16W-90	294	201	213	97	264	146
	S16W-105	309	216	228	112	279	150
	S16W-130	334	241	253	137	304	162
	S16W-150	354	261	273	157	324	177
J609a	S16W-75	278,5	185,5	197,5	82	248,5	139
	S16W-90	293,5	200,5	212,5	97	263,5	145
	S16W-105	308,5	216	228	112	278,5	149
J609b	S16W-75	289,5	197	209	82	259,5	147
	S16W-90	304,5	212	224	97	274,5	153
	S16W-105	319,5	227	239	112	289,5	157
	S16W-130	344,5	252	264	137	314,5	169
	S16W-150	364,5	272	284	157	334,5	184

CON CARICA BATTERIE OPZIONALE WITH BATTERY CHARGING OPTIONAL AVEC CHARGE BATTERIE OPTION MIT BATTERIELADER OPTIONAL CON CARGADOR DE BATERIAS OPCIONAL
CB
20

PRESE TIPO SOCKETS TYPE PRISES TYPE STECKDOSEN ENCHUFES TIPO	P
AMERICANO AMERICAN AMERICAIN AMERIKANISH	0
FRANCESE FRENCH FRANCAISE FRANZOSISCHE FRANCES	6
SCHUKO	9
CEE	46,5

SCHEMA ELETTRICO - WIRING DIAGRAM - SCHEMA ELECTRIQUE SCHALTPLAN - ESQUEMA ELECTRICO

50 Hz

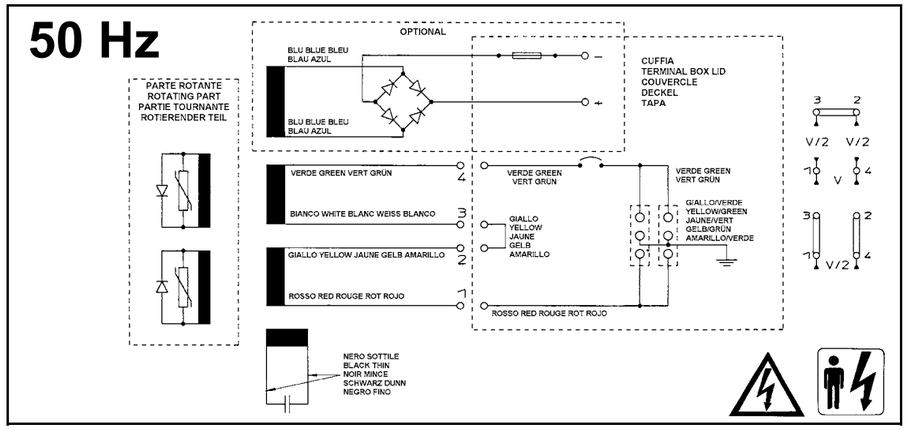

60 Hz

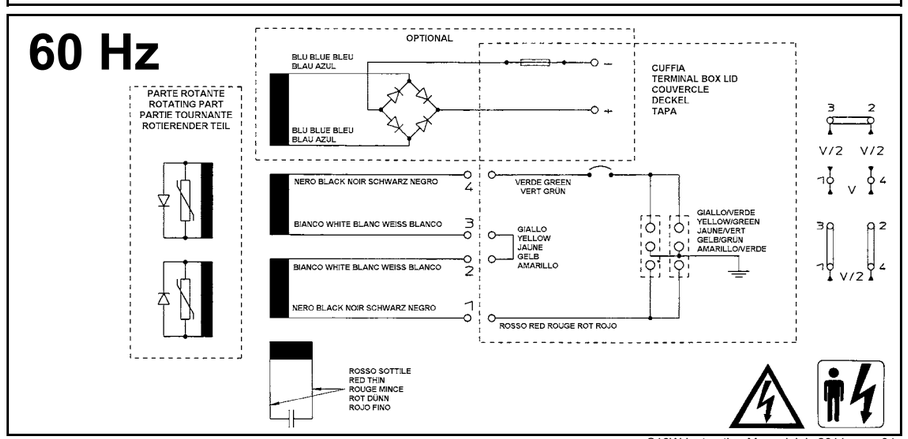

CARATTERISTICHE / CHARACTERISTICS / CARACTERISTIQUES TECNISCHE MERKMALE / CARACTERISTICAS

Tipo / Type / Type / Typ / Tipo	3000 RPM 115-230V 50 Hz				3600 RPM 120-240V 60 Hz				Assorbimento per verifica condensatori / Capacitor test absorption / Verification condensateur / Absorption zur prufung der Kondensatoren / Consumos para la verification de condensadores			3000 RPM 50 Hz			3600 RPM 60 Hz		
		Statore / Stator / Stator / Stator / Estator	Rotore / Rotor / Rotor / Rotor / Rotor	Eccitazione / Exciting / Excitation / Erregung / Excitation		Statore / Stator / Stator / Stator / Estator	Rotore / Rotor / Rotor / Rotor / Rotor	Eccitazione / Exciting / Excitation / Erregung / Excitation				Volume d'aria / Air volume / Volume d'air / Luftmenge / Volumen de aire	Rumore / Noise / Bruit / Gerausch / Ruido		Volume d'aria / Air volume / Volume d'air / Luftmenge / Volumen de aire	Rumore / Noise / Bruit / Gerausch / Ruido	
	kVA	1-2 Ω	Ω	Ω	kVA	1-2 Ω	Ω	Ω	µF	I ac 230V 50Hz	I ac 240V 60Hz	m^3/min	7m dBA	1m dBA	m^3/min	7m dBA	1m dBA
S16W-75	2,5	1,30	2,62	7,91	3	0,97	2,62	5,460	12,5	0,90	1,13	2,5	56	72	3,3	60	77
S16W-90	3,5	0,946	3,25	6,83	4,2	0,709	3,25	5,330	14	1,01	1,27	2,5	56	72	3,3	60	77
S16W-105	4,1	0,733	3,51	4,66	4,9	0,570	3,51	3,129	20	1,44	1,81	2,4	56	72	3,2	60	77
S16W-130	5	0,493	3,95	2,90	6	0,360	3,95	2,446	25	1,80	2,26	2,4	56	72	3,2	60	77
S16W-150	5,7	0,411	4,38	2,58	6,8	0,326	4,38	2,012	31,5	2,28	2,86	2,3	56	72	3,1	60	77

DICHIARAZIONE DI CONFORMITA' CE	CE CONFORMITY DECLARATION	DECLARATION DE CONFORMITE' CE	CE KONFORMITÄTS ERKLÄRUNG	DECLARACION DE CONFORMIDAD CE
Noi dichiariamo sotto la nostra sola responsabilità che la macchina	We declare under our sole responsability that machine	Nous declarons sous notre responsabilité que la machine	Wir erkären unterunsere Verantwortlichkeit, daß die Maschine	Nosotros declaramos bajo nuestra exlusiva responsabilidad que la máquina

Type : S16W

come descritta nella documentazione allegata e nei nostri archivi, è in conformità con le direttive 2006/42, alla direttiva 2006/95, alla direttiva 2004/108, alle norme europee EN 12100-1, EN 12100-2, EN ISO 14121-1, EN 60204-1, EN 61000-6-3, EN 61000-6-1, EN 60034-1.	as described in the attached documentations and in our archives, in conformity with Directive 2006/42, Directive 2006/95, Directive 2004/108, and European norms EN 12100-1, EN 12100-2, EN ISO 14121-1, EN 60204-1, EN 61000-6-3, EN 61000-6-1 and EN 60034-1.	décrite comme dans la documentation ci-jointe et dans nos archives, est conforme aux directives 2006/42, à la directive 2006/95, à la directive 2004/108, aux normes européennes EN 12100-1, EN 12100-2, EN ISO 14121-1, EN 60204-1, EN 61000-6-3, EN 61000-6-1, EN 60034-1.	wie in der Dokumentation im Anhang und in unseren Archiven beschrieben übereinstimmt mit den der Richtlinie 2006/42, der Richtlinie 2006/95, der Richtlinie 2004/108 und den europäischen Normen EN 12100-1, EN 12100-2, EN ISO 14121-1, EN 60204-1, EN 61000-6-3, EN 61000-6-1, EN 60034-1.	como descripta en la documentaciòn adjunta y en nuestros archivos, está de acuerdo con las directivas 2006/42, con las directivas 2006/95, con las directivas 2004/108, y las normas europeas EN 12100-1, EN 12100-2, EN ISO 14121-1, EN 60204-1, EN 61000-6-3, EN 61000-6-1, EN 60034-1.
Questa macchina non può essere messa in servizio prima che la macchina in cui sarà assemblata, sia stata dichiarata conforme alle disposizioni della direttiva macchine 2006/42/CEE.	This machine must not be put into service until the machine in which it is intented to be incorporeted into, has been declared in conformity with provisions of 2006/42/CEE directives.	L'utilisation de l'alternateur n'est pas autorisée avant que l'ensamble alternateur et systeme d'entrainement, soit déclaré conforme aux dispositions de la directive 2006/42/CEE.	Der Betrieb der o.g. Maschine nach dem Zusammenbau darf nur dann erfolgen, wenn die Vorschriften der Maschinenrichtlinien 2006/42/EWG eingehalten werden.	Esta màquina no puede ser puesta en servicio antes que la màquina resultante, con la cual serà acoplada, sea declarada conforme con los disposiciones de la directiva màquina 2006/42/CEE.

Ragione sociale/Legal name/Raison sociale/ Firmenname/Nombre legal	MECC ALTE S.p.A.
Indirizzo sede/Headoffice address/Adresse du siege/Hauptsitz/Dirección	Via Roma, 20 - 36051 Creazzo (VI) Italy
Codice fiscale/Fiscal code/Numero R.C./ Steuernummer/Codigo fiscal	01267440244
Partita IVA/VAT Reg.Number/NumeroTVA/ USTID-Nr./Número de IVA	01267440244
Numero di telefono/Telephone number/Numero de telephone/Telephonnummer/Teléfono	+39 0444 396111
Numero di fax/Fax number/Numero de fax/ Faxnummer/Número de fax	+39 0444 396166
E-Mail	info@meccalte.it
Web site	www.meccalte.com

meccalte

Il Presidente
DIEGO CARRARO

ELENCO PARTI DI RICAMBIO / LIST OF SPARE PARTS / LISTE DES PIECES DETACHEES
ERSATZTEILLISTE / LISTA PARTES DE REPUESTO

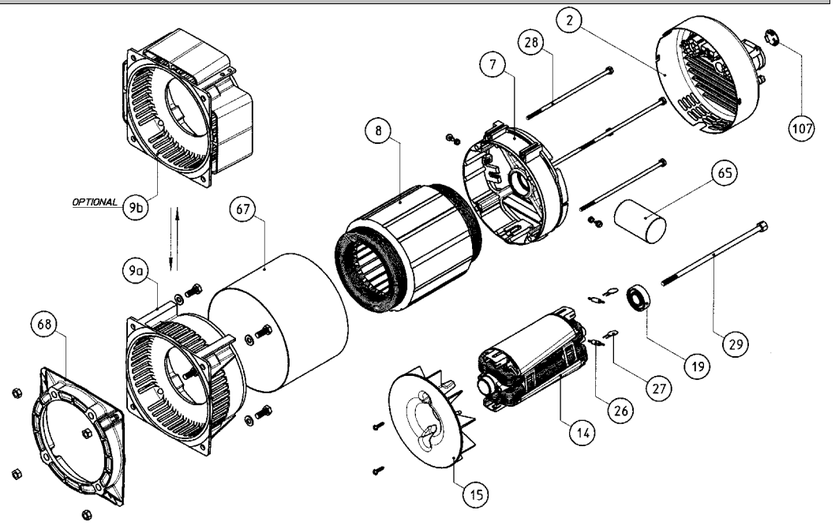

N°	DENOMINAZIONE	NAME	DESIGNATION	NAMEN	DENOMINACION	CODE
2	CUFFIA	TERMINAL BOX LID	COUVERCLE	DECKEL	TAPA	***
7	COPERCHIO POSTERIORE	NON DRIVE END BRACKET	FLASQUE ARRIERE	HINTERES GEHAUSE	TAPA POSTERIOR	0390302209
8	STATORE	STATOR	STATOR	STATOR	ESTATOR	***
9a	COPERCHIO ANTERIORE	DRIVE END BRACKET	FLASQUE AVANT	VORDERES GEHAUSE	TAPA ANTERIOR	0391700154
9b	COPERCHIO ANTERIORE IP23	IP23 DRIVE END BRACKET	FLASQUE AVANT IP23	VORDERES GEHAUSE IP23	TAPA ANTERIOR IP23	0391700153
14	INDUTTORE ROTANTE	ROTOR INDUCTOR	ROUE POLAIRE	ROTIERENDER INDUKTOR	INDUCTOR ROTANTE	***
15	VENTOLA	FAN	VENTILATEUR	LÜFTERRAD	VENTILADOR	0392000015
19	CUSCINETTO POSTERIORE 6203-2ZC3	REAR BEARING 6203-2ZC3	ROULEMENT ARRIERE 6203-2ZC3	HINTERES LAGER 6203-2ZC3	COJINETE POSTERIOR 6203-2ZC3	0390302521
26	DIODO	DIODE	DIODE	DIODE	DIODO	***
27	VARISTORE	VARISTOR	VARISTOR	VARISTOR	VARISTOR	9910384005
28	TIRANTE COPERCHI	COVER STAY BOLT	TIGE DE FLASQUE	STEHBOLZEN	TIRANTE DE LA TAPA	***
29	TIRANTE CENTRALE	SECURING STUD	TIGE CENTRALE	ZUGSTANGE	TIRANTE CENTRAL	***
65	CONDENSATORE	CAPACITOR	CONDENSATEUR	KONDENSATOR	CONDENSADOR	***
67	FASCIA DI CHIUSURA	LOCKING BAND	COUVERCLE DE PROTECTION	VERSCHLUSSBAND	BANDA DE COPERTURA	***
68	FLANGIA INTERCAMBIABILE	INTERCHANGEABLE FLANGE	FLASQUE DE LAISON	AUSTAUSCHBARER FLANSCH	BRIDA INTERCAMBIABLE	***
103	PRESA MONOFASE	SINGLE-PHASE SOCKET	PRISE MONOPHASE	EINPHASIGE DOSE	ENCHUFE MONOFASICA	***
107	TAPPO PER CUFFIA	TERMINAL BOX PLUG	OBTURATEUR	GUMMISTOPPEN	TAPON DE GOMA	0391802005
VARIANTI CARICA BATTERIA / VARIOUS BATTERY CHARGING / VARIANTES CHARGE BATTERIE / BATTERIELADEGERATVARIANTEN / VARIANTESA POR CARICA BATTERIA						
25	PONTE RADDRIZZANTE MONOFASE	RECTIFYNG SINGLE-PHASE BRIDGE	PONT REDRESSEUR MONOPHASE	BRUCKENGLEICHRICHTER EINPHASIG	PUENTE RECTIFICADOR	0391400607
36	MORSETTO CARICA BATTERIE ROSSO	RED BATTERY CHARGER TERMINAL	BORNE CHARGEUR BATTERIE ROUGE	BATTERIEAUFLADE-KLEMMEN ROT	BORNE CARCADOR DE BATTERIA ROJO	0391100021
36	MORSETTO CARICA BATTERIE NERO	BLACK BATTERY CHARGER TERMINAL	BORNE CHARGEUR BATTERIE NOIRE	BATTERIEAUFLADE-KLEMMEN SCHWARZ	BORNE CARCADOR DE BATERIA NEGRO	0391100022
55	PORTA FUSIBILE	FUSE HOLDER	PORTE FUSIBLE	SICHERUNGSSCHALTER	PORTA FUSIBLE	9909922015
-	FUSIBILE	FUSE	FUSIBLE	SICHERUNG	FUSIBLE	0390601103

Nella richiesta di pezzi di ricambio specificare il tipo e il codice dell'alternatore / When requesting spare parts always indicate the alternator's type and code / Pour toute demande de pieces detachées, prière de mentionner le type et le code de l'alternateur / Bei Ersatzteilbestellung bitte immer die Teilbenennung den Typ und den code des Wechselstromgenerators angeben / En cada pedido de pizas de recambio especificar siembre el tipo y el codigo del alternador

GARANZIA

A
La Mecc Alte garantisce la buona costruzione e qualita' dei propri alternatori per 24 mesi dalla data di spedizione dai propri stabilimenti o filiali.

B
Durante il suddetto periodo la Mecc Alte si impegna a riparare o sostituire (a proprie spese) nella propria sede, quelle parti che si fossero avariate, senza pero' essere tenuta a risarcimenti di danni diretti o indiretti.

C
La decisione sul riconoscimento o meno della garanzia e' riservata esclusivamente alla Mecc Alte previo esame delle parti avariate che dovranno pervenire in porto franco, alla sua sede di Vicenza.

D
Tutte le eventuali spese di viaggio, trasferta, trasporto, mano d'opera per lo smontaggio e rimontaggio dell'alternatore dall'apparecchiatura azionante sono sempre a carico dell'utente.

E
La garanzia decade se durante il periodo predetto, i prodotti fossero:

1
immagazzinati in luogo non adatto;

2
riparati o modificati da personale non autorizzato dalla Mecc Alte;

3
usati o sottoposti a manutenzione non in base alle norme stabilite dalla Mecc Alte;

4
sovraccaricati o impiegati in prestazioni diverse da quelle per le quali sono stati forniti.

La garanzia cessa comunque qualora il cliente fosse inadempiente nei pagamenti per qualunque ragione.

WARRANTY

A
Mecc Alte warrants the good manufacture and quality of all its products for 24 months, starting from the time of shipment from our factories or our branches.

B
During said period Mecc Alte obliges to repair replace at its cost, at its works, all those parts which failed without any other liability of any type, direct or indirect.

C
The decision for warranty approval is Mecc Alte's exclusive right and subject to a previous examination of the failed parts which are to be forwarded fob Mecc Alte Italy for analysis.

D
All the eventual expenses concerning travel, board, transport, and labour for assembly/disassembly of alternator from the drive unit are always at the user's charge.

E
The warranty shall be void if during the above described period the following anomalies should occur:
1
inadeguate storage;

2
repair or modification by unauthorized personnel;

3
use or maintenance conditions which do not conform whith norms established by Mecc Alte;

4
overload or application other than what the product was meant for.

Warranty coverage also expires whenever the client, for whatever reason, is late in payment.

GARANTIE

A
La société Mecc Alte garantit la bonne construction et qualité de ses produits pour une durée de 24 mois à compter de la date d'expédition de ses usines de fabrication ou filiales.

B
Durant la période indiquée, Mecc Alte s'engage à réparer ou à remplacer (à prix équivalent) dans la société, la partie qui serait endommagée sans tou-tefois être tenue de prendre en considération les frais directs ou indirects.

C
La décision sur la prise en charge ou non de la garantie est réservée exclusivement à Mecc Alte sur examen préalable des pièces endommagées qui devront parvenir en port Franco à l'usine de Vicenza.

D
Tout les éventuels frais de voyage, transfert, transport, main d'oeuvre pour le démontage de l'alternateur sont toujours à la charge de l'utilisateur.

E
La garantie ne s'applique pas si durant la période indiquée il y a:

1
emmagasinement dans un local non adapté;

2
réparations ou modifications personnelles non autorisées par Mecc Alte;

3
usage et manutentions non conformes aux normes établies par Mecc Alte;

4
surcharges et emplois des fonctions différentes de celles pour lequel ils sont fournis.

Il est bien évident que la garantie ne s'applique que sur le matériel payé en totalité.

GARANTIE

A
Die Firma Mecc Alte gibt 24 Monate Garantie ab dem Zeitpunkt der Auslieferung vom Stammhaus oder einer ihrer Filialen auf die einwandfreie Konstruktion und Qualität ihrer Generatoren.

B
Wahrend der genannten Periode repariert oder ersetzt Mecc Alte zu seinen Kosten alle fehlerhaften Teile, ohne Rucksicht ob direkt oder indirekt.

C
Mecc Alte behält sich das Recht vor, die fehlerhaften Teile frei Mecc Alte Vicenza zurückzufordern, zur Schadensuntersuchung

D
Alle eventuellen Kosten wie Transport, Fahrtkosten, Arbeitslohn für De-und Montage gehen zu Lasten des Kunden.

E
Die Garantie in O.A. Zeit wird fur nachstehende Faktoren ausgeschlossen:

1
nicht korrekte Lagerung;

2
Reparatur oder Modefizierung durch nicht von Mecc Alte autorisiertem Personal;

3
Gebrauch oder Einsatz bei Konditionen die nicht der Norm von Mecc Alte entsprechen;

4
Überlast Gebrauch oder Montage anders als wofür das Produkt bestimmt ist.

Die Garantie erlischt auch, wenn aus welchen Grunden auch immer, der Kunde in Zahlung überfällig ist.

GARANTIA

A
Mecc alte garantiza la buena construccion y calidad de los proprios productos por 24 meses desde la fecha de salida de sus fabricas o de sus filiales.

B
Durante disho periodo la Mecc Alte se obliga a reparar o sustituir a su cargo, en su establecimiento todas acquallas piezas que hubieran sido averiadas, sin hacerse cargo de otro tipo de danos, directos o indirectos.

C
La decision acerca del reconocimiento de garantia esta reservada exclusivamente a la Mecc Alte, previo examen de las partes averiadas que deberan permanecer en puerto franco o en su propia sede de Vicenza.

D
Todos los eventuales gastos de transporte, viaje, transferencia o mano de obra, para el desmontaje y nuevo montaje, del alternador o elemento accionante seran siempre a cargo del usuario.

E
La garantia caduca si durante el periodo descrito se produjeran las siguientes anomalias:

1
almacenaje en lugar inadecuado;

2
reparacion o modificacion por personal no autorizado por Mecc Alte;

3
utilizacion o condiciones de manuntencion que contravengan las normas establecidas por Mecc Alte;

4
sobrecarga o empleo en prestaciones distintas de aquellas para las que ha estado suministrado.

La garantia cesa igualmente en el momento que el cliente sea moroso de pago, cualquiera que sea la razon.

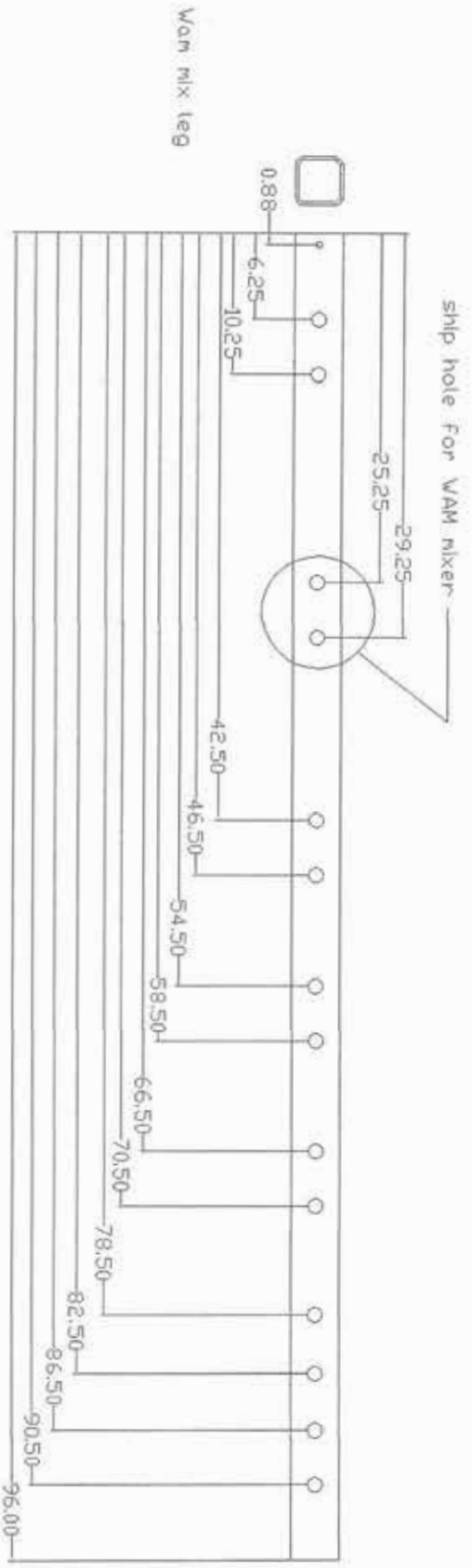
ship hole for WAM mixer
25.25
29.25
0.88
6.25
10.25
42.50
46.50
54.50
58.50
66.50
70.50
78.50
82.50
86.50
90.50
96.00
Wam mix leg